LEICESTER MIDDLE SCHOOL BUILDING PROJECT

LEICESTER, MASSACHUSETTS

MASSACHUSETTS SCHOOL BUILDING AUTHORITY
MSBA PROJECT NO: 201601510015

February 13, 2020

SCHEMATIC DESIGN – ESTIMATE SUBMISSION
OUTLINE SPECIFICATION

Finegold Alexander Architects
77 North Washington Street
Boston Massachusetts 02114

LEICESTER MIDDLE SCHOOL BUILDING PROJECT
LEICESTER, MASSACHUSETTS

MASSACHUSETTS SCHOOL BUILDING AUTHORITY
SCHEMATIC DESIGN SUBMISSION
OUTLINE SPECIFICATION
MSBA PROJECT NO: 201601510015

ARCHITECTS FINEGOLD ALEXANDER ARCHITECTS 77 North Washington Street Boston, Massachusetts T: 617-227-9272	OWNER'S REPRESENTATIVE NV5 70 Fargo Street, Suite 800 Boston, MA 02210 T: 617.744.3120
CIVIL ENGINEERS NITSCH ENGINEERING 2 Center Plaza, Suite 430 Boston, MA 02108 T: 617.338.0063	GEOTECHNICAL ENGINEERS McPhail Associates, LLC 2269 Massachusetts Ave. Cambridge, MA 02140 T: 617.868.1420
LANDSCAPE ARCHITECTS Warner Larson Landscape Architects 130 West Broadway Boston, MA 02127 T: 617.464.1440	STRUCTURAL ENGINEERS RSE Associates, Inc. 63 Pleasant St. Ste. 200 Watertown, MA 02472 T: 617.926.9300
MECHANICAL, PLUMBING & FP ENGINEERS BLW Engineers, Inc. 311 Great Road, Post Office Box 1551 Littleton, MA 01460 T: 978.486.4301	ELECTRICAL ENGINEERS ART Engineering 38 Front St. Floor 3 Worcester, MA 01608 T: 508.797.7071
ACOUSTICAL CONSULTANTS Acentech 33 Moulton Street Cambridge, Massachusetts T: 617.499.8000	CODE CONSULTANT Jensen Hughes 1 Lincoln St. Boston, MA 02111 T: 508.538.9409
SUSTAINABILTY The Green Engineer, Inc. 77 North Washington Street Boston, Massachusetts T: 978.369.8978	SECURITY DVS 1020 Sherman Avenue Hamden, CT 06514 T: 203.288.6490
FOOD SERV ICE Crabtree McGrath Associates, Inc. 161 West Main Street Georgetown, MA 01833 T: 978.352.8500	

TABLE OF CONTENTS

INTRODUCTION
10 PROJECT DESCRIPTION
20 PROPOSAL, BIDDING AND CONTRACTING
30 COST SUMMARY
40 CONTRACTING REQUIREMENTS

A SUBSTRUCTURE
A10 FOUNDATIONS
A40 SLABS ON GRADE

B SHELL
B10 SUPERSTRUCTURE
B20 EXTERIOR ENCLOSURE
B30 EXTERIOR HORIZONTAL ENCLOSURES

C INTERIORS
C10 INTERIOR CONSTRUCTION
C20 INTERIOR FINISH

D SERVICES
D10 CONVEYING
D20 PLUMBING
D30 HEATING VENTILATION AND AIR CONDITIONING
D40 FIRE PROTECTION
D50 ELECTRICAL

E EQUIPMENT AND FURNISHINGS
E10 EQUIPMENT
E20 FURNISHINGS

G SITEWORK
G10 EARTHWORK
G20 SITE IMPROVEMENTS
G30 LIQUID AND GAS STIE UTILITIES

APPENDIX
APPENDIX I – LEEDV4 BD+C: SCHOOLS (LEEDV4 SC) PROJECT SCORECARD
APPENDIX II – SECURITY NARRATIVE AND CUT SHEETS
APPENDIX III – ACOUSTIC PERFORMANCE NARRATIVE
APPENDIX IV – FOOD SERVICE EQUIPMENT LIST AND BUDGET
APPENDIX V – HVAC SMOKE EVACUATUION NARRATIVE

INTRODUCTION

10: PROJECT DESCRIPTION

1010 – Project Summary

- New PK-8 School building in Leicester, Massachusetts. The educational facility has been designed for 1000 students (930 K-8 and 70 PK) and includes classrooms, gymnasium, cafetorium, exterior hardscape and landscaping.

- Approximate building square footage: 152,881 gsf.

- Site: Refer to civil/landscape drawings.

- Sustainable Design Program: LEED V4/4.1

1020 – Project Program

- Site Program: Improvements include new parking areas for staff and visitors, separate bus and car drop off as well as new vehicular drives off of Winslow Street. Site improvements include renovation of the existing football to be a new turf field, renovation to existing track, the relocation of the existing multipurpose softball and soccer fields, a renovation to the east baseball/soccer field and new play structures. Site improvements for education include areas for outdoor learning, amphitheater like seating and a rain collection water feature. Exterior lighting and improvements are planned across the site including downlights at the parking areas and pedestrian paths. Exterior building mounted lighting and security cameras are included as well.

- Facility Program: The new building will be a three-story, 152,881 square feet elementary school.

1030 – Existing Conditions

- The existing middle school building and associated hardscape, including parking, driveways and service drives will be removed in their entirety.

1040 – Project Criteria

- Zoning Requirements: The project will require local and state permitting. Site plan review and Planning Board will be reviewed locally.

- Code Analysis: The Schematic Drawings include a detailed code analysis. The proposed building will be in compliance with 780 CMR, 9th edition based on an amended version of 2015 IBC. The building will be Type IIA, Non-combustible, protected construction and occupancy classification E with accessory uses A Cafeteria, A Gymnasium and B Business. The building will be fully protected with an automatic sprinkler system and fully accessible in accordance with MAAB and ADA.

- Sustainability: To achieve LEED certification, the building project is to be designed and constructed according to the principles of the U.S. Green Building

Council's LEED Green Building Rating System, Building Design + Construction Version 4/4.1 for Schools. The LEED Score Card checklist is included with this report. Refer to APPENDIX I – LEEDV4 BD+C: SCHOOLS (LEEDV4 SC) PROJECT SCORECARD

1050 – Owner's Work

- Owner will remove all existing furnishings and movable equipment prior to demolition of existing building.

- Owner will provide moveable furniture, fixtures and equipment under a separate budget.

- Owner will provide technology systems under separate contracts; infrastructure and coordination will be under this base budget.

1060 – Phased Construction

- All work will be performed on an existing occupied school site in two phases. Phase 1 of new construction will occur adjacent to the existing school. Students will remain in the existing Leicester Middle School through the duration of construction. Once the new building is able to be occupied, the second phase of construction will begin with the abatement and demolition of the existing school and the completion of sitework, athletic fields, parking and drives at the location of the existing building.

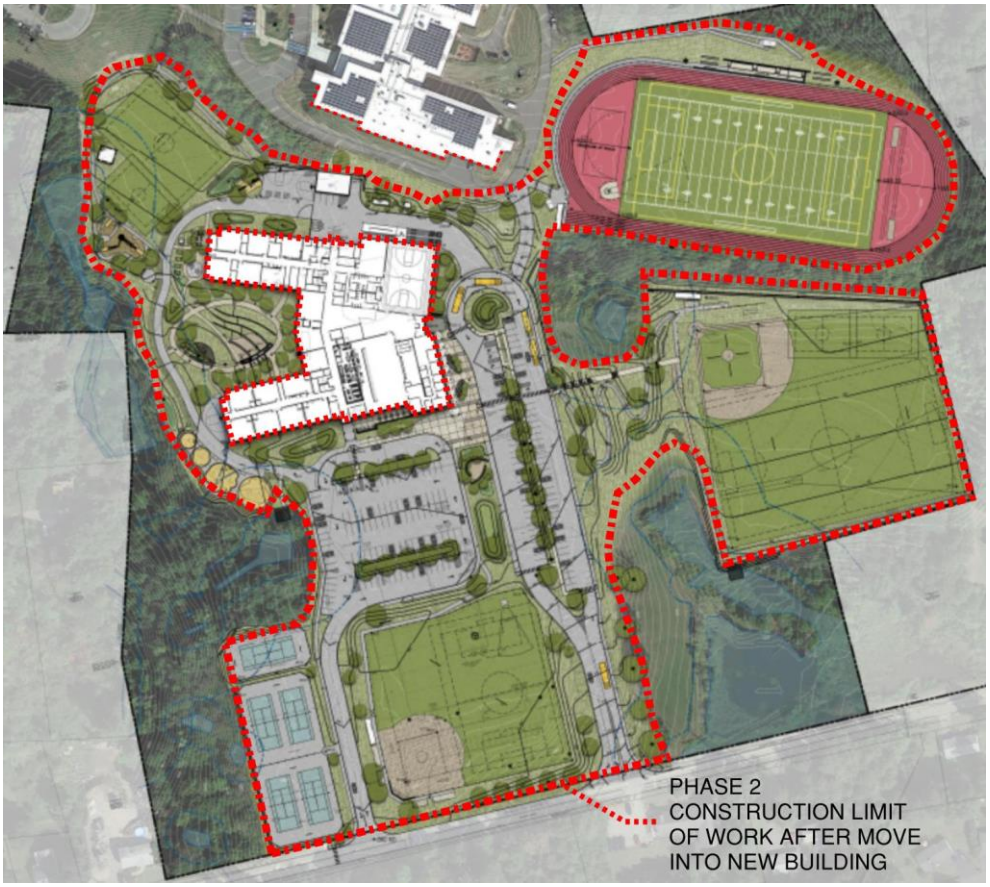

- Awarded contractor to construct temporary access drives and parking, including signage to maintain access and use of the facility. During Phase 2, the contractor is to construct a temporary parking lot to provide approximately 100 stalls. Construct temporary dust and noise barriers during construction.

- Refer to limit of work line on Schematic Drawings.

20: PROPOSAL, BIDDING AND CONTRACTING

2010 – Delivery Method

- Construction Manager at Risk with Trade-Contractors as required by Massachusetts Public Bid Laws.

  - Anticipated Trade-Bid categories:
    - MASONRY
    - MISCELLANEOUS AND ORNAMENTAL IRON
    - WATERPROOFING, DAMPPROOFING AND CAULKING
    - ROOFING AND FLASHING
    - METAL WINDOWS
    - GLASS AND GLAZING
    - TILE

- ACOUSTICAL TILE
- RESILIENT FLOORS
- PAINTING
- ELEVATORS
- PLUMBING
- FIRE SUPPRESSION
- HVAC
- ELECTRICAL WORK

2020 – Qualification Requirements

- Bidders for General Construction and Sub-trades shall be DCAM certified for their category of work.

2030 – Proposal Requirements: Not Applicable.

2040 – Bid Requirements

- Bidding procedures according to Massachusetts Public Bid Laws

2050 – Contracting Requirements

- Contracting procedures according to Massachusetts Public Bid Laws

30: COST SUMMARY

3010 – Elemental Cost Estimate

3020 – Assumptions and Qualifications:

3030 – Allowances: Not Applicable

3040 – Alternates: Not Applicable

3050 – Unit Prices: Not Yet Determined

A SUBSTRUCTURE

A10: FOUNDATIONS

The building substructure will be cast-in-place reinforced concrete walls, slabs-on-grade, and spread footings. A site-specific investigation is required to confirm preliminary data recommending conventional spread footings bearing on glacial till with a capacity of 2 TSF.

- Perimeter insulation
- Concrete: 4,000 psi normal-weight concrete for footings and foundation walls.
- Materials: Aggregate, Portland Cement, Fly Ash and/or Slag, Water
- Admixtures: Air entrainment, Water-reducing admixture as needed

A1010 STANDARD FOUNDATIONS EXTERIOR FOUNDATIONS

A continuous footing along the perimeter of the building of the building will be 3'-0"x1'-0" with 3 PSF of rebar, supporting a 3'x16" frost wall with 5 PSF of rebar. Bottom of footing for the perimeter footings will be 4'-0" minimum below grade.

FOUNDATION WALL DAMPPROOFING

- Self-adhered sheet waterproofing and drainage layer for all finished interior spaces below grade.
- Bituminous dampproofing and protection course for foundations without waterproofing.

ELEVATOR PIT

A 5'-0" deep, 12" thick reinforced concrete pit is required at the elevator. There will be 2'x2'x2' sump pit in the elevator.
Crystalline waterproofing for elevator and sump pits

COLUMN FOUNDATIONS

Building columns will be supported on reinforced concrete footings with the following sizes:

- The 2-story portions will have a 30'x30' grid of 8'x8'x2' concrete footings with 3 PSF rebar
- The 3-story portions will have a 30'x30' grid of 10'x10'x2'-3" concrete footings with 4 PSF rebar
- Column footings part of the braced frames will have 12'x12'x2'-6" concrete footings with 5 PSF rebar. Assume 30 locations.

2' x 2' reinforced concrete pilasters will support the perimeter columns.

SPECIAL FOUNDATIONS

A 12” thick structural slab on grade with 5 PSF rebar will be used in the southwest wing where grade slopes away from the first floor. Assume 10,000 SF of area. Footings and the frost wall in this area only will follow the natural grade and be located on average 7’ below the first floor.

A40: SLABS-ON-GRADE

A4010 STANDARD SLABS-ON-GRADE

- A 5” concrete slab on grade reinforced with 6x6 W2.9x2.9 welded wire fabric will be poured on a vapor barrier and insulation over a 12” layer of crushed stone. Control joints will be saw-cut in the slab at 15’-0” OC each way. Non-loading bearing CMU walls will bear on a 2’ wide x 12” thickened slab with (2)-#5.
- Perimeter underslab insulation, 3” rigid
- Vapor retarder, heavy duty 15 mil
- Underslab drainage system.
- Concrete: 4,000 psi normal-weight concrete for slab on grade
- Materials: Aggregate, Portland Cement, Fly Ash and/or Slag, Water
- Admixtures: Water-reducing admixture as needed

B SHELL

B10: SUPERSTRUCTURE

The proposed building superstructure will be a structural steel frame with concrete floor slabs on composite steel deck. The roof will be framed with steel beams or open web joists with steel roof deck. Lateral loads will be resisted by structural steel braced frames.

COLUMNS

Typical columns will be W12 wide-flanges on a 30'x30' grid. HSS shapes that are AESS may be used where exposed.

LATERAL FORCE RESISTING SYSTEM

The lateral load resisting system will be concentric steel braces frames. Assume 8 frames each direction with HSS8x8x1/2 steel braces.

FIREPROOFING

Primary steel frame will receive spray-on fireproofing. Underside of roof deck (other than the gymnasium and dining) will also receive spray-on fireproofing.

CMU WALLS

6" and 8" CMU walls will be reinforced and grouted solid at rebar.

FUTURE EXPANSION

Future expansion is expected to be adjacent to proposed construction and will not affect the design during the current phase.

B1010 - FLOOR CONSTRUCTION

FLOOR STRUCTURAL FRAME

The elevated floors will primarily be framed with composite wide flange beams with ¾" diameter shear studs welded to the top flange at approximately 12" oc. For a 30' span, assume W16 beams at 10 feet o.c., and W21 for girders and spandrels with a weight of 13 PSF on the 2nd and 3rd floors.

FLOOR DECKS AND SLABS

The second and third floors will consist of 3¼" lightweight concrete slab over 3" composite metal deck with 6x6 W2.1x2.1 welded wire fabric.

MISCELLEOUS STEEL

The following is a list of miscellaneous steel that is included in the steel weight indicated under "Floor Structural Frame":

- Continuous galvanized relieving angle at perimeter to support masonry façade.
- Miscellaneous steel will be provided to support the elevator rails.
- Steel girts will brace the top of wall below the clerestory windows on 2 exterior sides of the gym.

- Miscellaneous steel will be provided to support the divider curtain in the gym and to support the basketball hoops.
- Miscellaneous steel will be provided to support the lighting grid to service the stage area.

B1020 - ROOF CONSTRUCTION

ROOF STRUCTURAL FRAME

The roof will primarily be framed with steel wide flange beams. For a 30' span, assume W14 beams at 10 feet o.c. and W18 for girders and spandrels with a weight of 11 PSF on the roof (13 PSF if supporting mechanical rooftop equipment). Besides snow load, the roof will be designed for ballasted PV weight above the classrooms.

The dining roof will have 40" deep long-span open web steel trusses at 8'-10' oc with diagonal bridging, and the gym roof will have 44" deep long-span open web steel trusses at 8'-10' oc with diagonal bridging. Assume a weight of 6 PSF for these areas.

ROOF DECKS

The main roof will have 3"-18 gauge galvanized roof deck. The roof of the gymnasium, health and wellness studio, cafetorium, media center and school commons will have 3" acoustic metal roof deck.

STEEL DUNNAGE

Provide galvanized steel dunnage to support mechanical rooftop equipment.

B20: EXTERIOR ENCLOSURE

B2010 – Exterior Walls

- Exterior facing, typical: Combination of unit masonry veneer, cast stone veneer and high density phenolic panels.
  - Multiple colors and patterns in masonry and siding panels will be required.
- Architectural precast concrete units at base, sills, and banding.
- Back-up wall: Cold-formed metal framing and gypsum sheathing.
- Anti-graffiti coatings.
- EXTERIOR WALL ASSEMBLY A – MASONRY VENEER WALL
  - 3 5/8" thick, 8" x 16" Split-face Concrete Masonry Veneer Units with graffiti resistant coating. (Basis of Design: Ajandris, Architectural CMU or equal)
  - 1 1/2" Air Space.
  - 4" Rigid Insulation.
  - Continuous, liquid applied, air and vapor barrier.
  - 5/8" DensGlass Exterior Sheathing.

- 6” Metal Stud framing / R19 fiberglass batt insulation w/Kraft paper face.
- 5/8” Gypsum wall board, with painted interior face.
- Assembly thermal insulation value of R39.

- EXTERIOR WALL ASSEMBLY B – MASONRY VENEER WALL
  - 3 5/8” thick Cast Stone Veneer Units. (Basis of Design: Arriscraft, Architectural Linear Brick Series)
  - 1 1/2” Air Space.
  - 4” Rigid Insulation.
  - Continuous, liquid applied, air and vapor barrier.
  - 5/8” DensGlass Exterior Sheathing.
  - 6” Metal Stud framing / R19 fiberglass batt insulation w/Kraft paper face.
  - 5/8” Gypsum wall board, with painted interior face.
  - Assembly thermal insulation value of R39.

- EXTERIOR WALL ASSEMBLY C – PHENOLIC PANEL WALL
  - 1/2” High Density Phenolic Panel on manufacturers system on aluminum “Z” girts. (Basis of Design: Trespa Meteon)
  - 1 1/2” Air Space.
  - 4” Rigid Insulation.
  - Continuous, liquid applied, air and vapor barrier.
  - 5/8” DensGlass Exterior Sheathing.
  - 6” Metal Stud framing / R19 fiberglass batt insulation w/Kraft paper face.
  - 5/8” Gypsum wall board, with painted interior face.
  - Assembly thermal insulation value of R39

- EXTERIOR FASCIAS AND PARAPET CAPS
  - Prefinished break metal aluminum fascia, drip edge and coping caps.

- METAL ROOF SCREEN AT ROOF-TOP EQUIPMENT SCREENS
  - 3/4” thick corrugated profile aluminum panel with exposed fasteners..
  - Galvanized structural tube columns with horizontal galvanized steel tube sections at top, middle and bottom of screen wall.

- GENERATOR ENCLOSURE
  - 5/4” thick by 6” wide tongue and groove vertical pattern siding. Pressure treated pine subframe structure with galvanize steel tube posts, spaced 6’ on center. Overall screen height is 10’ above adjacent grade with operable gates for service.

- GENERATOR ENCLOSURE
  - Concrete Loading Dock and Ramp constructed
    Solid concrete formed walls and slab with appropriate
    rebar reinforcing. Provide embedded steel angles
    and loading edge with docker leveler and bumpers.
    Provide galvanized pipe guardrail at both sides of ramp and

loading zone. Concrete wall finish to be rubbed smooth. Concrete land and ramp surface to have a broom finish.

- Loading dock leveler and bumpers

B2020 – Exterior Windows and Louvers

Exterior windows shall be of one of the following aluminum framed systems: curtainwall, skylight, storefront and punched windows.

- Exterior Storefront System, fixed: 4 1/2" deep storefront system with 2" sightlines, such as Kawneer TRIFAB VG 451T or approved equal with insulating glass assemblies, including argon-filled space, heat mirror film, and low-e coating.
    - Assembly thermal performance U-factor:
        - 0.06 for Double Glazed Units (with thermal break)
        - 0.22 for Triple Glazed Units

- Exterior Storefront System, operable: 4 1/2" deep storefront system with 2" sightlines, with operable GLASSvent, such as Kawneer TRIFAB VG 451T or approved equal with insulating glass assemblies, including argon-filled space, heat mirror film, and low-e coating.
    - 30" deep, Storefront Horizontal Sun Shade Device and Out Rigger System, such as Kawneer Versoleil SunShade or approved equal.
    - 30" deep, Interior Light Shelves, translucent polycarbonate, such as Kawneer InLighten Interior Light Shelf or approved equal.
    - Assembly thermal performance U-factor:
        - 0.06 for Double Glazed Units (with thermal break)
        - 0.22 for Triple Glazed Units

- Exterior Curtainwall System: 6" deep curtainwall system with 2 1/2" sightlines, such as Kawneer 1600 System 2, or approved equal, field glazed with insulating glass assemblies, including argon-filled space, heat mirror film, and low-e coating.
    - Inserted operable windows to be 2 1/8" deep "visually frameless" frame, such as Kawneer GLASSvent, Architectural Window or approved equal. (at west facades)
    - 30" deep, Curtain Wall Horizontal Sun Shade Device and Out Rigger System, such as Kawneer Versoleil SunShade "Airfoil" or approved equal.
    - 14" deep, Curtain Wall Vertical Sun Shade Device, such as Kawneer Versoleil SunShade Single Blade System or approved equal.
    - 30" deep, Interior Light Shelves, translucent polycarbonate, such as Kawneer InLighten Interior Light Shelf or approved equal.

- Insulating Glass Assemblies: Two panes of ¼-inch glass with ½-inch argon-filled space, suspended heat mirror film, and solar control low-e coating.

- Assembly thermal performance U-factor:
  - 0.06 for Double Glazed Units (with thermal break)
  - 0.22 for Triple Glazed Units

- Spandrel: Solid ceramic frit opacifier on surface #4.

- Security Glazing: School Guard Glass, Smart Glass or equal.
  - Refer to Schematic Drawings for security glazing locations.
  - Glazing: Non-Penetrable SG4 / SG4 IUG or equal.
  - Framing Non-Penetrable reinforced aluminum framing by Armortex or equal
  - Refer to APPENDIX II – SECURITY NARRATIVE AND CUT SHEETS

B2030 – Exterior Doors

- Main and Secondary Entry Doors: Aluminum and glass doors are to be prefinished aluminum, medium stile, 2" thick with non-penetrable, insulated glass. Interior vestibule doors to be the same as exterior. Provide eight automatic door openers; two at the main entrance, one at the Pre-K/K entrance, one at the delivery entrance and one at each of the two courtyard entrances.

- Service Doors: 14 gauge galvanized steel thermally broken frames. Doors to be fully- welded 16 gauge exterior doors with closer reinforcement.

B30: ROOFING

B3010 – Roof Coverings

- TPO membrane roofing, typical: Fully adhered, 90 mil thick white TPO with sloped polyisocyanurate insulation, (6 1/2" minimum thickness.), R62.5 average ½-inch gypsum protection board with glass mat facing and 6-mil reinforced vapor barrier. TPO membrane roofing shall be white.

- Provide 2 layers of 5/8" thick substrate board within boundary of rooftop mechanical units for acoustical attenuation.

B3020 – Roof Openings

- Aluminum roof access stairs, hatches and ladders. Refer to Schematic Drawings

- Exhaust hatches

- Fixed unit and metal-framed skylights.

- Elevator venting.

B3030 – Miscellaneous Roof components

- Entrance canopies.

- Scuppers.
- Aluminum break metal roof edge, drip edge and roof drainage metals.
- Rooftop mechanical equipment screens, visual and acoustical types required.

C INTERIORS

C10: INTERIOR CONSTRUCTION

C1010 – Partitions

All wall construction is full height to the underside of the deck above.

Partition types are identified in the drawings. Refer to APPENDIX III – ACOUSTIC PERFORMANCE NARRATIVE for further information.

Typical gypsum board partitions: 5/8” thick gypsum board on 20 gauge steel studs..

Typical Partition Types – reference sheet A600 for depictions

Provide 2-hour Shaftwall at elevator and mechanical shafts, refer to plans.

Motorized Gymnasium divider curtains

C1020 – Interior Doors and Frames

- Double glass acoustic borrowed lites with laminated glass.
- Acoustic type door and frame assemblies for acoustic rated partitions.
- Overhead coiling doors in Cafeteria area, motor operated and full height.

DOOR FRAMES: Hollow metal construction, 16 gauge steel, with welded mitered corners; shop primed for field painting.

FLUSH WOOD DOORS

At corridor doors, classrooms and other teaching spaces, administrative offices, toilet rooms and other doors in public areas, provide 3’ x 7’ solid core wood veneer doors with low-VOC natural finish.

- Face veneer: Maple veneer, quarter sliced or plain sliced.
- Finish: Factory finish with conversion varnish.
- Glass: Clear glass, laminated
- Applied Acoustical Gaskets at frame with recessed, integral drop down gasket at bottom of door at all learning spaces and administration doors.

FLUSH STEEL DOORS: At service locations, mechanical and electrical room doors, custodial equipment and storage room doors.

HARDWARE: Sargent Signature Series mortised door locks.

FIRE RATED DOOR AND SIDELITES

At locations noted on the Schematic Drawings, with fire rated 45 minute safety glass. Fire rated glass by Technical Glass Products, or equal.

INTERIOR ALUMINUM DOORS AND WINDOWS

Aluminum and glass doors to be prefinished aluminum, medium stile, 2" thick with non-penetrable glass.

INTERIOR GRILLES AND GATES

Rolling grilles: Security grilles to close off portions of the building after hours with mechanism concealed above the ceiling.

- Corridor and Lobby grilles labeled on plan as "Control shutter": Motorized and lowered by key cards connected to the school security system. Fire alarm or power failure will override and automatically lower grille.

- Kitchen rolling grilles: Four required. Three at Servery, each is 15'-0" W x 10'-9" H with motorized operation by chain hoist and One at Dishwashing, 5'-0" W x 2'-0" H, manually operated by chain hoist.

C1030 – Fittings Specialties

- Ecophon type acoustic wall panels.
- OT/PT Framing and supports
- Lab support grids for power drops and equipment.
- Wood fiber acoustic wall panels equal to Tectum.
- Utility and closet shelving.
- Toilet Accessories.
- Interior light shelves, polycarbonate
- Solid surface at window sills and stools.
- Custom transparent finish maple millwork including wood caps for low walls, wood trim, custom wood benches, tiered seating, wall paneling, cubbies, and Admin. desks with plastic laminate, solid wood edges, and solid surface countertops; and Media Center shelving.
- Fire protection specialties.
- Green Screen systems.

INTERIOR RAILINGS AND HANDRAILS

Brushed steel railings with painted vertical picket and guardrail design. Steel components to be shop primed and field painted.

COMPARTMENTS AND CUBICLES

Toilet Compartments: Recycled solid plastic panel compartments, fabricated from high density polyethylene, floor mounted and overhead braced, as manufactured by Capitol, Metpar, Santana or Sanymetal.

TOILET ACCESSORIES

Stainless steel toilet accessories by Bobrick, American Specialties or approved equal. Toilet accessories to include:

- Hand Dryer
- Grab Bars (36”, 48”, 18”)
- Toilet Paper Dispenser
- Sanitary Napkin Disposal
- Soap Dispenser
- Mirror
- ADA Mirror
- Robe Hook
- Infant Changing Station

Provide supplementary framing, and blocking to support fixtures, equipment services, heavy trim, grab bars, toilet accessories, furnishings, or similar construction.

WALL PROTECTION

Wainscoting (labeled “W.C.” or “Wainscote” in the Schematic Drawings) comprised of 6” x 12” ceramic tile adhered to wall substrate. Trim at top, bottom and corners of wainscoting to be anodized aluminum square edge trim, as manufactured by Schluter or approved equal.

Stainless Steel Corner Guards by NYSTROM or approved equal.

MARKERBOARDS AND TACKBOARDS

Porcelain enamel whiteboards (labeled “W.B.”) with marker tray and integrated magnetic surface.

Idea Paint for wall to wall, floor to ceiling, dry erase with magnetic primer. Refer to Schematic Drawings.

INFORMATION SPECIALTIES

Interior signage: Room identification signs and safety signage will be provided, including building directory and dedication plaque.

Exterior signage: New Exterior signage at Main Entry and at Pre-K entry as well as a freestanding sign at Main Entry on Winslow Avenue.

STORAGE SPECIALTIES – WOOD AND METAL LOCKERS

Student cubbies – Type 1 (at PK through 4): 16" W x 24" D x 48" H wood cabinets with bench base, upper compartments and coat hooks. See Schematic Drawings.

Student lockers – Type 2 (at 5th through 8th grade): 15" W x 12" D x 40" H metal lockers with doors, 4" base and solid surface top.

Kitchen lockers - Double stack, 12" W x 12"D x 80" H metal lockers with doors, 4" base and recessed into wall construction.

C20: STAIRS

C2010 – Stair Construction

- Steel pans with concrete fill.
- Industrial type steel grating stairs in mechanical rooms.
- Steel grating for catwalks and platforms at stage.
- Exterior aluminum ladders to all roof levels.
- Interior aluminum ladders to roof hatches.
- Elevator pit ladder.
- Picket type steel guardrails.
- Stainless steel handrails.

C2020 – Stair Finishes.

- Rubber treads, risers, stringers and landings.
- Porcelain tile treads and landing at School Commons Learning Stair.
- Maple veneer with natural finish at Learning Stair.

C30: INTERIOR FINISHES

C3010 – Wall Finishes

- Water-based latex system, typical: Primer with two finish coats
- High-performance system for corridors, stairways, toilet rooms: Epoxy primer with two polyurethane finish coats

- Ceramic tile for Toilet Rooms and Kitchen, full height in Kitchen, up to 5' in Toilet Rooms: 4" square glazed tile, thin-set. Epoxy paint above tile in Toilet Rooms.
- Ceramic tile for Corridors, wainscot: 4"x8" glazed tile, thin-set.
- Wood veneer cladding with natural finish on select wall surfaces. Refer to Schematic Drawings.
- FRP wall panels in custodial closets.

C3020 – Floor Finishes

- Sheet Linoleum, classrooms and corridors.
- Carpet Tile for Administration, Offices and Media Center: CRI Green Label carpet, adhered to concrete.
- Ceramic tile for toilet rooms: 2" square unglazed porcelain tile, thin-set.
- Porcelain tile at 1st Floor School Commons, extending to paired doors at classroom corridors and vestibules: 12" x 24" square unglazed porcelain tile, thin-set
- Athletic wood sports flooring in Gymnasium and Health and Wellness Studio.
- Hardwood strip flooring for Platform, hardboard on stage.
- Epoxy floor system for Kitchen.
- Ceramic tile in Locker rooms.

C3030 – Ceiling Finishes

- 2x2 acoustical ceiling tile, tegular edge with narrow grid.
- Suspended Gypsum board ceiling: ½" GWB on light gage framing or furring channels suspended from structure above.
- Acoustical Ceiling Tile: Tegular Edge ceiling tile 2x2 and 2x4 ceiling tiles. NRC 0.80. LR 0.89. Washable, USDA approved tile for Kitchen and Servery.
- Suspended Acoustical Ceiling Blades, by Armstrong SOUNDSCAPES or equal. (School Commons)
    - 16" Tall, 2" Thick, length varies
    - 12 Gauge hanger wires
    - 71% Recycled Content
    - Acoustic absorption: 1.38 sabins/SF
- Suspended linear wood acoustical ceiling by Armstrong WOODWORKS Tegular or equal.
- 2 x 2 acoustic tiles with 25 % (of the total ceiling area) Pyramid Sound Diffusers

- Drywall soffits.

C3040 – Interior Finishes by Room

PRE-K AND K CLASSROOMS

Floor:	Linoleum modular tile flooring w/ 4” Johnsonite Tightlock rubber base. Ceramic tile in toilet rooms.
Walls:	Painted gypsum wallboard. Idea-Paint, dry erase paint with magnetic primer on 1 wall, up to 6’. Refer to Schematic Drawings. Ceramic tile in toilet rooms.
Ceiling:	2 x 2 suspended acoustic tile.
Casework:	Clear finish maple veneer cabinets with solid surface countertops (provide a sink in all classrooms.) Lower cabinets and wardrobe unit. See Schematic Drawings. Clear finish maple veneer cubbies with bench and coat hooks.
Specialties:	In-room drinking fountain (integrated into sink) Non-Penetrable Exterior and Interior Glass with reinforced aluminum frame. Room darkening roller shades at exterior windows, manual. Opaque, “lockdown” roller shades at entry door and sidelight, manual.

GRADE 1-4 CLASSROOMS

Floor:	Linoleum modular tile w/ 4” Johnsonite Tightlock rubber base.
Walls:	Painted gypsum wallboard. Idea-Paint, dry erase paint with magnetic primer on 1 wall, up to 6’. Refer to Schematic Drawings.
Ceiling:	2 x 2 suspended acoustic tile.
Casework:	Clear finish maple veneer cabinets with solid surface countertops (provide a sink in all classrooms). Lower cabinets and wardrobe unit. See Schematic Drawings. Clear finish maple veneer cubbies bench and coat hooks.
Specialties:	In-room drinking fountain (integrated into sink) Non-Penetrable Interior Glass with reinforced aluminum frame. Room darkening roller shades at exterior windows, manual. Opaque, “lockdown” roller shades at entry door and sidelight, manual.

GRADE 5-8 CLASSROOMS

Floor:	Linoleum modular tile w/ 4” Johnsonite Tightlock rubber base.
Walls:	Painted gypsum wallboard. Idea-Paint, dry erase paint with magnetic primer on 1 wall, up to 6’. Refer to Schematic Drawings.
Ceiling:	2 x 2 suspended acoustic tile.
Casework:	Clear finish maple veneer cabinets with solid surface countertops (provide a sink in all classrooms). Lower cabinets and wardrobe unit. See Schematic Drawings.

Specialties: Non-Penetrable Interior Glass with reinforced aluminum frame.
Room darkening roller shades at exterior windows, manual.
Opaque, “lockdown” roller shades at entry door and sidelight, manual.

GRADE 6, 7, 8 SCIENCE CLASSROOMS

Floor: Linoleum modular tile w/ 4” Johnsonite Tightlock rubber base.
Walls: Painted gypsum wallboard. Idea-Paint, dry erase paint with magnetic primer on 1 wall, up to 6’. Refer to Schematic Drawings.
Ceiling: 2 x 2 suspended acoustic tile.
Casework: Clear finish maple veneer cabinets with solid surface countertops (provide a sink in all classrooms). Lower cabinets and wardrobe unit. See Schematic Drawings.
Specialties: Non-Penetrable Exterior and Interior Glass with reinforced aluminum frame.
Room darkening roller shades at exterior windows, manual.
Opaque, “lockdown” roller shades at entry door and sidelight, manual.
3 Prep Rooms
1 Refrigerator per room

LOWER/UPPER ART ROOM, ART STORAGE, KILN, WORK ROOM

Floor: Sheet linoleum w/ 4” Johnsonite Tightlock rubber base.
Walls: Painted gypsum wallboard w/ 50% tackable surface. Idea-Paint, dry erase paint with magnetic primer on 1 wall up to 6’. Refer to Schematic Drawings.
Ceiling: 2 x 2 suspended acoustic tile.
Casework: Clear finish maple veneer cabinets w/ solid surface counter tops (provide 2 sinks) Lower cabinets and wardrobe unit. Lockable. See Schematic Drawings.
Specialties: Non-Penetrable Interior Glass with reinforced aluminum frame.
Room darkening roller shades at exterior windows, manual.
Opaque, “lockdown” roller shades at entry door and sidelight, manual.
Kiln: large

SCHOOL COMMONS

Floor: 12” x 24" square unglazed porcelain tile, thin-set
Walls: Painted gypsum wallboard and split face block veneer. Idea-Paint, dry erase paint with magnetic primer on 1 wall up to 6’. Refer to Schematic Drawings.
Ceiling: Acoustical metal deck with Suspended Acoustical Ceiling Blades and Suspended linear wood acoustical ceiling ascents.
Casework: Clear finish maple veneer display cabinets.

BAND ROOM AND ENSEMBLE

Floor: Carpet (non-static) w/ 4” Johnsonite Tightlock rubber base.
Walls: Painted gypsum wallboard. Idea-Paint, dry erase paint with magnetic primer on 1 wall up to 6’. Refer to Schematic Drawings.
Ceiling: 2 x 2 acoustic tiles with 25 % (of the total ceiling area) Pyramid Sound

	Diffusers – Band only (randomized and centered over ensemble seating).(In Ensemble, the ceiling should be 100% absorptive.)
Casework:	Clear finish maple veneer cabinets with solid surface countertops (provide a sink in Instrumental Music). Clear finish maple veneer cabinets w/ solid surface counter tops (provide 1 sinks) Upper cabinets, lower cabinets and wardrobe unit. Lockable. See Schematic Drawings.
Specialties:	Acoustic panel on 25% of wall surface in Band Room, 50% Ensemble Room. (concentrated at two perpendicular walls in Ensemble). Non-Penetrable Exterior and Interior Glass with reinforced aluminum frame. Portable Risers Room darkening roller shades at exterior windows, manual. Opaque, “lockdown” roller shades at entry door and sidelight, manual.

CHORUS ROOM

Floor:	Carpet (non-static) w/ 4” Johnsonite Tightlock rubber base.
Walls:	Painted gypsum wallboard. Idea-Paint, dry erase paint with magnetic primer on 1 wall up to 6’. Refer to Schematic Drawings.
Ceiling:	2 x 2 acoustic tiles with 25 % (of the total ceiling area) Pyramid Sound Diffusers (randomized and centered over ensemble seating).
Casework:	Clear finish maple veneer cabinets with solid surface countertops. Upper cabinets, lower cabinets and wardrobe unit. Lockable. See Schematic Drawings.
Specialties:	Acoustic panel on 25% of wall surface. Non-Penetrable Exterior and Interior Glass with reinforced aluminum frame. Portable Risers Room darkening roller shades at exterior windows, manual. Opaque, “lockdown” roller shades at entry door and sidelight, manual.

LOWER SCHOOL MUSIC ROOM

Floor:	Carpet (non-static) w/ 4” Johnsonite Tightlock rubber base.
Walls:	Painted gypsum wallboard. Idea-Paint, dry erase paint with magnetic primer on 1 wall up to 6’. Refer to Schematic Drawings.
Ceiling:	2 x 2 acoustic tiles with 25 % (of the total ceiling area) Pyramid Sound Diffusers (randomized and centered over ensemble seating).
Casework:	Clear finish maple veneer cabinets with solid surface countertops. (provide a sink in Instrumental Music). Lower cabinets and wardrobe unit. Lockable. See Schematic Drawings.
Specialties:	Acoustic panel on 25% of wall surface. Non-Penetrable Exterior and Interior Glass with reinforced aluminum frame. Portable Risers Room darkening roller shades at exterior windows, manual. Opaque, “lockdown” roller shades at entry door and sidelight, manual.

LOWER / UPPER SCHOOL INTERVENTION

Floor:	Linoleum modular tile w/ 4" Johnsonite Tightlock rubber base.
Walls:	Painted gypsum wallboard. Idea-Paint, dry erase paint with magnetic primer on 1 wall up to 6'. Refer to Schematic Drawings.
Ceiling:	2 x 2 suspended acoustic tile.
Casework:	Clear finish maple veneer cabinets with solid surface countertops (provide a sink in all classrooms). Lower cabinets and wardrobe unit. Lockable. See Schematic Drawings. See Schematic Drawings.
Specialties:	Non-Penetrable Interior Glass with reinforced aluminum frame. Room darkening roller shades at exterior windows, manual. Opaque, "lockdown" roller shades at entry door and sidelight, manual.

SPED - LOWER SCHOOL AND SENSORY

Floor:	Linoleum modular tile w/ 4" Johnsonite Tightlock rubber base. Ceramic tile in toilet rooms.
Walls:	Painted gypsum wallboard. Idea-Paint, dry erase paint with magnetic primer on 1 wall up to 6'. Refer to Schematic Drawings. Ceramic tile in toilet rooms.
Ceiling:	2 x 2 suspended acoustic tile.
Casework:	Clear finish maple veneer cabinets with solid surface countertops (provide a sink in all classrooms). Lower cabinets and wardrobe unit. Lockable. See Schematic Drawings.
Specialties:	In-room drinking fountain (integrated into sink) Non-Penetrable Interior Glass with reinforced aluminum frame. Room darkening roller shades at exterior windows, manual. Opaque, "lockdown" roller shades at entry door and sidelight, manual. 6' high 2" thick soft wall pads, hypoallergenic and latex-free material, at Sensory Rooms. Floor mat pads in Sensory Rooms.

SPED - UPPER SCHOOL AND SENSORY

Floor:	Linoleum modular tile w/ 4" Johnsonite Tightlock rubber base. Ceramic tile in toilet rooms.
Walls:	Painted gypsum wallboard. Idea-Paint, dry erase paint with magnetic primer on 1 wall up to 6'. Refer to Schematic Drawings. Ceramic tile in toilet rooms.
Ceiling:	2 x 2 suspended acoustic tile.
Casework:	Clear finish maple veneer cabinets with solid surface countertops (provide a sink in all classrooms). Lower cabinets and wardrobe unit. Lockable. See Schematic Drawings.
Specialties:	Non-Penetrable Interior Glass with reinforced aluminum frame. Room darkening roller shades at exterior windows, manual. Opaque, "lockdown" roller shades at entry door and sidelight, manual. 6' high 2" thick soft wall pads, hypoallergenic and latex-free material, at Sensory Rooms.

Floor mat pads in Sensory Rooms.

GRADE 3-4 STEM CLASSROOMS (w/STE STORAGE)

Floor:	Linoleum modular tile w/ 4" Johnsonite Tightlock rubber base.
Walls:	Painted gypsum wallboard. Idea-Paint, dry erase paint with magnetic primer on 1 wall up to 6'. Refer to Schematic Drawings.
Ceiling:	2 x 2 suspended acoustic tile.
Casework:	Clear finish maple veneer cabinets with solid surface countertops (provide a sink in all classrooms Lower cabinets and wardrobe unit. Lockable. See Schematic Drawings.
Specialties:	Unistrut Ceiling Grid for power drops, etc. with 6 electrical recoiling drops. Non-Penetrable Interior Glass with reinforced aluminum frame. Room darkening roller shades at exterior windows, manual. Opaque, "lockdown" roller shades at entry door and sidelight, manual.

GRADE 5-6 STEM CLASSROOMS

Floor:	Linoleum modular tile w/ 4" Johnsonite Tightlock rubber base.
Walls:	Painted gypsum wallboard. Idea-Paint, dry erase paint with magnetic primer on 1 wall up to 6'. Refer to Schematic Drawings.
Ceiling:	2 x 2 suspended acoustic tile.
Casework:	Clear finish maple veneer cabinets with solid surface countertops (provide a sink in all classrooms). Lower cabinets and wardrobe unit. Lockable. See Schematic Drawings.
Specialties:	Unistrut Ceiling Grid for power drops, etc. with 6 electrical recoiling drops. Non-Penetrable Interior Glass with reinforced aluminum frame. Room darkening roller shades at exterior windows, manual. Opaque, "lockdown" roller shades at entry door and sidelight, manual. 2 Glazed Garage Doors, 10 ft wide

GRADE 7-8 STEM CLASSROOMS

Floor:	Linoleum modular tile w/ 4" Johnsonite Tightlock rubber base.
Walls:	Painted gypsum wallboard. Idea-Paint, dry erase paint with magnetic primer on 1 wall up to 6'. Refer to Schematic Drawings.
Ceiling:	2 x 2 suspended acoustic tile.
Casework:	Clear finish maple veneer cabinets with solid surface countertops (provide a sink in all classrooms). Lower cabinets and wardrobe unit. Lockable. See Schematic Drawings.
Specialties:	Unistrut Ceiling Grid for power drops, etc. with 6 electrical recoiling drops. Non-Penetrable Interior Glass with reinforced aluminum frame. Room darkening roller shades at exterior windows, manual. Opaque, "lockdown" roller shades at entry door and sidelight, manual.

MAKER SPACE – LOWER / UPPER

Floor:	Linoleum modular tile w/ 4" Johnsonite Tightlock rubber base.
Walls:	Painted gypsum wallboard. Idea-Paint, dry erase paint with magnetic primer on 1 wall up to 6'. Refer to Schematic Drawings.
Ceiling:	2 x 2 suspended acoustic tile.
Casework:	Clear finish maple veneer cabinets with solid surface countertops (provide a sink in all classrooms). Lower cabinets and wardrobe unit and open shelving. Lockable. See Schematic Drawings.
Specialties:	Acoustic panel on 40% of wall surface. Non-Penetrable Interior Glass with reinforced aluminum frame. Room darkening roller shades at exterior windows, manual. Black-out roller shades at exterior windows, manual. Opaque, "lockdown" roller shades at entry door and sidelight, manual. Green Screen painted on teaching wall.

ENGLISH SECOND LANGUAGE / SPEECH

Floor:	Linoleum modular tile w/ 4" Johnsonite Tightlock rubber base.
Walls:	Painted gypsum wallboard. Idea-Paint, dry erase paint with magnetic primer on 1 wall up to 6'. Refer to Schematic Drawings.
Ceiling:	2 x 2 suspended acoustic tile.
Casework:	Clear finish maple veneer cabinets with solid surface countertops (provide a sink in all classrooms). Lower cabinets and wardrobe unit. Lockable. See Schematic Drawings.
Specialties:	Non-Penetrable Interior Glass with reinforced aluminum frame. Room darkening roller shades at exterior windows, manual. Opaque, "lockdown" roller shades at entry door and sidelight, manual.

OCCUPATIONAL THERAPY & PHYSICAL THERAPY (OT/PT) ROOM (LOWER / UPPER)

Floor:	Linoleum modular tile w/ 4" Johnsonite Tightlock rubber base.
Walls:	Painted gypsum wallboard. Idea-Paint, dry erase paint with magnetic primer on 1 wall up to 6'. Refer to Schematic Drawings.
Ceiling:	2 x 2 acoustic tile.
Casework:	Clear finish maple veneer cabinets with solid surface countertops (provide a sink in all classrooms). Lower cabinets and wardrobe unit. Lockable. Refer to Schematic Drawings.
Specialties:	Occupational swing and support Non-Penetrable Exterior and Interior Glass with reinforced aluminum frame. Room darkening roller shades at exterior windows, manual. Opaque, "lockdown" roller shades at entry door and sidelight, manual.

LIVING AND LEARNING CLASSROOM

Floor:	Linoleum modular tile w/ 4" Johnsonite Tightlock rubber base. Ceramic tile in toilet rooms.
Walls:	Painted gypsum wallboard. Idea-Paint, dry erase paint with magnetic primer on 1 wall up to 6'. Refer to Schematic Drawings. Ceramic tile in toilet rooms.

Ceiling:	GWB Ceiling
Casework:	Clear finish maple veneer cabinets with solid surface countertops (provide a sink in all classrooms). Lower cabinets, wardrobe unit and cubbies. Lockable. See Schematic Drawings.
Specialties:	Non-Penetrable Exterior and Interior Glass with reinforced aluminum frame. Room darkening roller shades at exterior windows, manual. Opaque, “lockdown” roller shades at entry door and sidelight, manual. Provide 1 Microwave, 1 Dishwasher, 1 Refrigerator, 1Stove/Oven, 1 Washing Machine and 1 Dryer.

SUB. SEPARATE CLASSROOM

Floor:	Linoleum modular tile w/ 4” Johnsonite Tightlock rubber base.
Walls:	Painted gypsum wallboard. Idea-Paint, dry erase paint with magnetic primer 1 wall up to 6’. Refer to Schematic Drawings.
Ceiling:	GWB ceiling
Casework:	Clear finish maple veneer cabinets with solid surface countertops (provide 1 sink). Lower cabinets and wardrobe unit. Lockable. See Schematic Drawings.
Specialties:	Non-Penetrable Exterior and Interior Glass with reinforced aluminum frame. Room darkening roller shades at exterior windows, manual. Opaque, “lockdown” roller shades at entry door and sidelight, manual.

DE-ESCALATION ROOM

Floor:	Linoleum modular tile w/ 4” Johnsonite Tightlock rubber base.
Walls:	Painted gypsum wallboard.
Ceiling:	GWB ceiling Casework: None.
Specialties:	Room darkening roller shades at exterior windows, manual. Opaque, “lockdown” roller shades at entry door and sidelight, manual. 6’ high 2” thick soft wall pads, hypoallergenic and latex-free material. Floor mat pads

SENSORY

Floor:	Linoleum modular tile w/ 4” Johnsonite Tightlock rubber base.
Walls:	Painted gypsum wallboard.
Ceiling:	GWB ceiling
Casework:	None
Specialties:	Occupational swing and support 6’ high 2” thick soft wall pads, hypoallergenic and latex-free material. Non-Penetrable Interior Glass with reinforced aluminum frame. Opaque, “lockdown” roller shades at entry door and sidelight, manual.

HEALTH CLASSROOM

Floor:	Linoleum modular tile w/ 4” Johnsonite Tightlock rubber base.
Walls:	Painted gypsum wallboard. Idea-Paint, dry erase paint with magnetic primer on 1 wall up to 6’. Refer to Schematic Drawings.
Ceiling:	2 x 2 suspended acoustic tile.
Casework:	Clear finish maple veneer cabinets with solid surface countertops

(provide a sink in all classrooms). Lower cabinets and wardrobe unit. Lockable. See Schematic Drawings.

Specialties: Non-Penetrable Exterior and Interior Glass with reinforced aluminum frame.
Room darkening roller shades at exterior windows, manual.
Opaque, "lockdown" roller shades at entry door and sidelight, manual.

GYMNASIUM

Floor: Wood athletic flooring, vented rubber base. 2 ¼" overall.
Walls: High Impact GWB, painted.
Ceiling: Exposed, painted. Acoustical Decking
Specialties: Opaque, "lockdown" roller shades at entry door and sidelight, manual.
Non-Penetrable Interior Glass with reinforced aluminum frame.
6' high Polyurethane Foam Heavy Duty wall pads around entire perimeter.
Acoustic panels on 20% of wall surface.
Walking Track
Bleachers 100 LF
Scoreboard
Gym Divider Curtain
Basketball Hoops: (2) main and four (4) adjustable side height hoops, power operated.
Volleyball post and recessed sleeves.

LOCKER ROOM

Floor: Rubber/epoxy
Walls: Ceramic Tile
Ceiling: GWB, epoxy painted
Specialties: Floor mounted bench
Solid Surface Shelf
Coat Hooks

HEALTH AND WELLNESS STUDIO

Floor: Wood athletic flooring, vented rubber base. 2 ¼" overall.
Walls: High Impact GWB, painted.
Ceiling: Exposed, painted. Acoustical Decking
Specialties: Non-Penetrable Interior Glass with reinforced aluminum frame.
Opaque, "lockdown" roller shades at entry door and sidelight, manual.
6' high Polyurethane Foam Heavy Duty wall pads around entire perimeter.
Acoustic panels on 20% of wall surface.

ADMINISTRATION

(Includes Principal's Offices, Assistant Principal's offices, Guidance Office, Guidance, Supervisory, Storage, Psychologist Offices, Records, Conference rooms, Copy room, Open Office, Restrooms, Team and General Office.)

Floor: Carpet w/ 4" Johnsonite Tightlock rubber base.

	Ceramic tile in toilet rooms.
Walls:	Painted gypsum wallboard, typical. Ceramic tile in toilet rooms.
Ceiling:	2 x 2 suspended acoustic tile w/ gypsum board soffits at exterior window wall.
Casework:	Clear finish maple veneer cabinets with solid surface countertops. Reception Desk, see Schematic Drawings.
Specialties:	Non-Penetrable Exterior and Interior Glass with reinforced aluminum frame. Room darkening roller shades at exterior windows, manual. Opaque, “lockdown” roller shades at interior windows of corridor and lobby, manual.

LOWER/UPPER SCHOOL NURSES

Floor:	Linoleum modular tile w/ 4” Johnsonite Tightlock rubber base. Ceramic tile in toilet room.
Walls:	Painted gypsum wallboard, typical. Ceramic tile in toilet room.
Ceiling:	2 x 2 suspended acoustic tile.
Casework:	Clear finish maple veneer cabinets with solid surface countertops. (provide a sink). Lower cabinets and wardrobe unit. Lockable. See Schematic Drawings.
Specialties:	Medicine cabinet Non-Penetrable Exterior and Interior Glass with reinforced aluminum frame. Room darkening roller shades at exterior windows, manual. Full size refrigerator with freezer. Opaque, “lockdown” roller shades at main corridor glazing, manual.

TEACHER PLANNING

Floor:	Linoleum modular tile w/ 4” Johnsonite Tightlock rubber base.
Walls:	Painted gypsum wallboard. Idea-Paint, dry erase paint with magnetic Primer on 1 wall. Floor to ceiling. Refer to Schematic Drawings.
Ceiling:	2 x 2 suspended acoustic tile.
Casework:	Clear finish maple veneer cabinets with solid surface countertops (provide a 1 sink per room). Lower cabinets and wardrobe unit. Lockable. See Schematic Drawings.
Specialties:	Non-Penetrable Interior Glass with reinforced aluminum frame. Room darkening roller shades at exterior windows, manual. Opaque, “lockdown” roller shades at interior windows of corridor and lobby, manual. 1 Microwave per room 1 Refrigerator per room

FLEXIBLE LEARNING

Floor:	Linoleum modular tile w/ 4” Johnsonite Tightlock rubber base.

Walls:	Painted gypsum wallboard. I Idea-Paint, dry erase paint with magnetic primer on 1 wall up to 6'. Refer to Schematic Drawings. Wainscoting (labeled "W.C." or "Wainscote" in the Schematic Drawings) comprised of 4" x 8" ceramic tile adhered to wall substrate. Trim at top, bottom and corners of wainscoting to be anodized aluminum square edge trim, as manufactured by Schluter or approved equal.
Ceiling:	ACT ceiling. See Schematic Drawings.
Casework:	XX LF Clear finish maple veneer multi-tier seating. See Schematic Drawings.
Specialties:	

CORRIDORS

Floor:	Linoleum modular tile w/ 4" Johnsonite Tightlock rubber base.
Walls:	Painted gypsum wallboard. Wainscoting (labeled "W.C." or "Wainscote" in the Schematic Drawings) comprised of 4" x 8" ceramic tile adhered to wall substrate. Trim at top, bottom and corners of wainscoting to be anodized aluminum square edge trim, as manufactured by Schluter or approved equal. 6 ft AFF. Maple Veneer cladding at select locations. Refer to Schematic Drawings.
Ceiling:	ACT ceiling. See Schematic Drawings.

CAFETERIA, STAFF DINING, STORAGE

Floor:	Linoleum modular tile
Walls:	Painted gypsum wallboard
Ceiling:	Linear acoustic wood clouds. Painted structural framing and acoustical deck above.
Specialties:	25% of vinyl-faced, wall mounted acoustic panel with NRC of 1.0. Non-Penetrable Exterior and Interior Glass with reinforced aluminum frame. Room Darkening Shades/Drapes at exterior wall, power operated. Opaque, "lockdown" roller shades at main corridor glazing, manual.

PLATFORM

Floor:	Maple wood flooring.
Walls:	Painted gypsum wallboard, typical.
Ceiling:	Painted exposed structure.
Specialties:	Stage Draperies & Riggings: Forward setting, including valance and front curtain. Maple Proscenium

KITCHEN

Floor:	Epoxy and base
Walls:	Ceramic Tile and painted gypsum wallboard
Ceiling:	2 x 2 suspended washable acoustical tile.
Specialties:	Rolling Grilles All equipment. Refer to APPENDIX IV – FOOD SERVICE EQUIPMENT LIST AND BUDGET

MEDIA CENTER

Floor:	Carpet w/ 4” Johnsonite Tightlock rubber base.
Walls:	Painted gypsum wallboard, typical. Idea-Paint, dry erase paint with mag netic primer on 2 walls. Floor to 6’ high. Refer to Schematic Drawings.
Ceiling:	Acoustical Deck with Suspended linear wood acoustical ceiling ascent.
Casework:	Clear finish maple veneer bookcases and select cladding.
Specialties:	Non-Penetrable Interior Glass with reinforced aluminum frame. Opaque, “lockdown” roller shades at main corridor glazing, manual. Room Darkening Shades and exterior and interior windows.

TOILET ROOMS

Floor:	2”x 2” ceramic tile w/ ceramic tile base.
Walls:	Moisture resistant gypsum wallboard w/ 4” x 4” ceramic tile, floor to ceiling.
Ceiling:	Painted gypsum wallboard.

SERVER ROOM / IT ROOM

Floor:	Carpet (non-static) w/ 4” Johnsonite Tightlock rubber base.?
Walls:	Painted gypsum wallboard.
Ceiling:	2 x 2 suspended acoustic tile.
Casework:	Clear finish maple veneer cabinets with solid surface countertops. Upper cabinets, lower cabinets and wardrobe unit. Lockable. See Schematic Drawings.
Specialties:	None

EGRESS STAIR 1, 2, 3 AND 4

Floor:	Rubber stair treads, risers and stringers on concrete metal pan.
Walls:	Painted gypsum wallboard.
Ceiling:	Exposed structure, painted.
Railings:	Painted steel guardrail and balusters with stainless steel handrails.

MAIN / LEARNING STAIR

Floor:	Porcelain Tile stair treads, risers and landings on concrete metal pan.
Walls:	Painted gypsum wallboard.
Ceiling:	Exposed structure, painted.
Casework:	Clear finish maple veneer learning stair. See Schematic Drawings.
Railings:	Painted steel guardrail and balusters with stainless steel handrails.

MECHANICAL / FIRE PUMP / ELECTRICAL / ELEVATOR MACHINE / EMERG. ROOM

Floor:	Sealed concrete.
Walls:	Painted gypsum wallboard, typical.
Ceiling:	See Schematic Drawings.

CUSTODIAL

Floor:	Sealed concrete.
Walls:	FRP, 7'-0" HIGH, Painted gypsum wallboard, typical.
Ceiling:	2 x 2 Acoustical Ceiling Tile
Specialties:	Mop Sink and Mop Rack
	Shelving

D SERVICES

D10 CONVEYING SYSTEMS

D1010 – Elevators and Lifts

Hydraulic passenger elevator, 3500 pound capacity, 125 fpm,. Twin Roped Hydraulic cylinders, three floor stops, stainless steel doors, frames, and cab interior. Shaft to be 2 hour, shaftwall. Travel: 42'-0" +/- . Platform Size: 7'-0" Wide X 6'-2" deep.

D20: PLUMBING

D2010 -GENERAL REQUIREMENTS

- Examine all Project Specifications and Drawings for requirements which affect work of this Section whether or not such work is specifically mentioned in this Section.
- The following definitions apply to the Drawings and Specification
  - Furnish: The term "furnish" is used to mean "supply and deliver to the Project site, ready for unloading, unpacking, assembly, installation, and similar operations."
  - Install: The term "install" is used to describe operations at project site including actual "unloading, unpacking, rigging in place, assembly, erection, placing, anchoring, applying, working to dimension, finishing, curing, protecting, cleaning, and similar operations."
  - Provide: The term "provide" means to "furnish and install, complete and ready for intended use."
  - Installer: An "installer" is the contractor or an entity engaged by the contractor, either as an employee, subcontractor, or sub-subcontractor for a performance of a particular construction activity, including installation, erection, application and similar operations. Installers are required to be experienced in the operations they are engaged to perform.
  - Contractor: The term "Contractor" shall mean Plumbing Contractor.

D2020 -WORK INCLUDED

- Work in this section includes providing labor, materials, equipment and services necessary for a complete and safe installation in accordance with the Contract Documents and all applicable codes and authorities having jurisdiction.
- Building:

- Provide new plumbing fixtures as indicated on the drawings including all associated valves, trim, piping, supports, carriers and all final plumbing connections.
- A new domestic water service shall be brought into the new building addition. The plumbing contractors work shall terminate at a point 10 feet outside the building, underground.
- New sanitary, storm and vent systems including final connections for all new plumbing fixtures. The new sanitary and storm systems shall be carried outside the building underground, the plumbing contractors work shall terminate at a point 10 feet outside of the building. The new vent systems in the new addition shall be taken up through the new building and up through the roof.
- New hot and cold-water systems within building including final connections for all new plumbing fixtures. New hot water return systems within the building including circulation pump and controls.
- New kitchen grease waste system and grease interceptors inside the building.
- Cleaning, caulking, testing and adjusting of all plumbing fixtures.
- Provide new water heater including thermostatic mixing valves.
- Furnish access panels for installation by the related trades of surfaces in which they are installed.
- Core drilling, patching and sealing of existing walls and floors.
- Insulation of all hot water, hot water return, cold water piping and all non-potable water piping including all associated valves and pipe fittings.
- Floor drains and roof drains. All floor drains shall be provided with trap primer systems.
- All valves and sundries.
- Complete balancing and testing of all plumbing systems.
- Interior grease interceptors.
- Coordination with all existing conditions at the site.
- Backflow Preventers as indicated and as required.

- General
  - Valves
  - Cleanouts
  - Sleeves, inserts, hangers and accessories

- Pipe identification and valve tags
- Insulation
- Flanges, union fittings and couplings
- Fire-safing at piping and sleeves
- Cleaning, testing and sanitizing and balancing
- Cutting and patching
- Access panels
- Supplementary steel for piping and equipment supports
- Operating and maintenance manuals
- Guarantee
- Shop drawings and reproducible record drawings
- Necessary supervision and coordination information to any other trades involved in the construction, to accommodate space, support or service requirements for equipment and piping provided under this Section of the Specifications.
- All materials and labor necessary for installation and operation of equipment, furnished by others, requiring plumbing services and/or work that would fall under the jurisdiction or review of the plumbing inspector.
- Cutting and Patching as outlined in this section.
- Plumbing fixtures and trim

D2030 -REFERENCES

- For products or workmanship specified by association, trade, or federal standards, comply with requirements of the standard, except when more rigid requirements are specified or are required by applicable codes.
- The date of the standard is that in effect as the Bid date, except when a specific date is specified.
- Schedule of References:
  - ANSI American National Standards
  - ASME American Society of Mechanical Engineers
  - ASTM American Society for Testing and Materials
  - AWWA American Water Works Association

- FM Factory Mutual System
- IEEE Institute of Electrical & Electronics Engineers
- CISPI Cast Iron Soil Pipe Institute
- PDI Plumbing and Drainage Institute
- NEMA National Electrical Manufacturer's Association
- NFPA National Fire Protection Association
- UL Underwriters' Laboratories, Inc.
- OSHA Occupational Safety and Health Administration
- MSS Manufacturers Standardization Society

D2040 -CODES, ORDINANCES, AND PERMITS

- Installation of systems and equipment provided under this section shall be done in strict accordance with the Massachusetts State Building and Plumbing Codes, with local supplements, Department of Environmental Protection Agency, NFPA, Massachusetts Architectural Access Board and any and all state and local requirements of the Authority Having Jurisdiction.

- All materials and installation provided under this Contract shall be approved for use in the State of Massachusetts, and done in strict accordance with the Massachusetts State Plumbing Code and NFPA.

- Give all notices, file all plans, obtain all permits, pay all fees and licenses, and obtain all necessary approvals from authorities having jurisdiction. Deliver all certificates of inspection to the authorities having jurisdiction. No work shall be covered before examination and approval by Architect/Engineer, inspectors, and authorities having jurisdiction. Replace imperfect or condemned work conforming to requirements, satisfactory to Architect, and without extra cost to the Owner. If work is covered before due inspection and approval, the installing contractors shall pay costs of uncovering and reinstalling the covering, whether it meets contract requirements or not.

D2050 -COORDINATION AND RESPONSIBILITY

- The contractor shall be responsible for visiting the site and reviewing the drawings to become familiar with the scope of work and the existing conditions. The contractor shall coordinate with all trades and all existing conditions prior to the commencement of work, in order to ensure that no interferences occur with other trades or with existing conditions, and to ensure that the work of this section will fit into the space.

D2060 -INTERPRETATION OF DRAWINGS AND SPECIFICATIONS

- It is the intention of the Specifications and Drawings to call for complete, finished work, tested and ready for continuous operation. Any apparatus, appliance, material or work not shown on the Drawings, but mentioned in the Specifications or

vice-versa, or any incidental accessories necessary to make the work complete in all respects and ready for operation, even if not particularly specified, shall be provided by the Plumbing Contractor without additional expense to the Owner.

- The Drawings are generally diagrammatic. The locations of all items that are not definitely fixed by dimensions are approximate only. The exact locations must be determined at the project and shall have the approval of the Architect before being installed. The Plumbing Contractor shall follow Drawings, including his shop drawings, in laying out work and shall check the Drawings of other trades to verify spaces in which work will be installed. Maintain maximum headroom and space conditions. Where space conditions appear inadequate, notify the Architect before proceeding with the installation. The Plumbing Contractor shall, without extra charge, make reasonable modifications in the layout as needed to prevent conflict with work of other trades or for proper execution of the work.

- Refer to the Architectural, Structural, HVAC and Electrical plans and coordinate location of all plumbing equipment and piping.

- Methods of running pipes are shown, but it is not intended to show every offset and fitting, nor every structural difficulty that may be encountered. To carry out the true intent and purpose of the Drawings, all necessary parts to make complete approved working systems ready for use, shall be furnished without extra charge. All work shall be installed in such a manner as to avoid being unsightly.

- Should it appear that there is a real or an apparent discrepancy between the drawings and specification, it shall be assumed that the Plumbing Contractor based his bid on doing work in a more expensive manner.

D2070 -OPERATION AND MAINTENANCE MANUALS

- Prepare and submit maintenance and operating manuals. Submit six (6) complete sets of operation and maintenance manuals.

- Table of Contents:

  - Introduction

    - Explanation of Manual and its use.

    - Description of Piping Systems.

  - System Operation

  - Maintenance

    - Recommended List of Spare Parts: Furnish two (2) typed sets of instructions for ordering spare parts with sectional views of the fittings or equipment showing parts numbered or labeled to facilitate ordering replacements. Each set shall include a list with itemized prices of those parts recommended to be kept on hand as spares, as well as the name and address of where they may be obtained.

    - System draining and filling instructions.

- Manufacturer's Literature

D2080 -UNDERWRITERS LABEL AND LISTING

- All electrical apparatus furnished under this Section shall be approved by UL and shall be labeled or listed where such is applicable. Where custom-built equipment is specified and the UL label or listing is not applicable to the completed product, all components used in the construction of such equipment shall be labeled or listed by UL where such is applicable to the component.

D2090 -CUTTING AND PATCHING

- All cutting and patching necessary for the proper installation of work to be performed under this Section and subsections shall be performed by the Plumbing Contractor. All cutting and patching associated with demolition work necessary for the installation of work under this section shall be by the General Contractor.

- All work shall be fully coordinated with all phases of construction, in order to minimize the requirements for cutting and patching.

- The Plumbing Contractor shall form all chases or openings for the installation of his own work, or shall cut the same in existing work and shall see that all sleeves or forms are in the work and properly set in ample time to prevent delays. He shall see that all such chases, openings, and sleeves are located accurately and are of the proper size and shape and shall consult with the Architect and the Contractors or Contractors concerned in reference to this work. In so doing, he shall confine the cutting to the smallest extent possible consistent with the work to be done. In no case shall piers or structural members be cut without the approval of the Architect/Engineer.

- The Plumbing Contractor shall carefully fit around, close up, repair, patch, and point around the work specified herein to match the adjacent surfaces and to the entire satisfaction of the Architect/Engineer.

- The Plumbing Contractor shall fill and patch all openings or holes left in the existing structures by the removal of existing equipment by himself.

- All of this work shall be carefully done by workmen competent to do such work and with the proper and smallest tools applicable.

- Any cost caused by defective or ill-timed work shall be borne by the Plumbing Contractor responsible therefore.

- Provide all cutting and patching work required for installation of materials and equipment under this section of the specifications, in such a manner so as to leave the work complete and in a condition that matches the corresponding area.

- When, in order to accommodate the work required under this section of the specifications, finished materials of other trades must be cut or fitted, furnish the necessary drawings and information to the trades whose materials must be cut or fitted.

- Do all required drilling and cutting of holes in concrete walls and floors for the installation of sleeves and supports provided under this section of the specification.

- After installation of pipe lines, the Contractor shall neatly patch, repair, and replace work where damaged, removed or altered for pipe line installation. This work shall be similar and equal in quality to the work removed or damaged, unless otherwise shown or specified. Such work shall include patching of masonry work, and wherever any such patching work is indicated on drawings or otherwise required.

- The fire resistance rating of floors, walls, and ceilings shall be maintained. UL listed firestopping shall be installed in accordance with manufacturer's written instructions.

D2100 -ELECTRICAL WORK

- All electrical apparatus and controls furnished as a part of the work of this Section, but which are not integral with the equipment served, will be mounted by the Electrical Contractor and all wiring will be done under D50 - ELECTRICAL.

- Except for electrical apparatus specifically called for as part of this Section, all switches and controllers required will be provided under D50 - ELECTRICAL.

- All electrical apparatus and controls furnished as a part of the plumbing work shall conform to applicable requirements under D50 - ELECTRICAL.

D2110 -OBTAINING INFORMATION

- Obtain from the manufacturer the proper method of installation and connection of the equipment that is to be furnished and installed. Obtain all information that is necessary to facilitate the work and to complete the project.

D2120 -GIVING INFORMATION

- Keep fully informed as to the size and shape and location of all openings required for all apparatus and give full information to all other Contractors. Furnish all supports required for installation of apparatus herein specified.

D2130 -COOPERATION AND COORDINATION WITH OTHER TRADES

- The work shall be so performed that the progress of the entire building construction including all other trades shall not be delayed nor interfered with. Materials and apparatus shall be installed as fast as conditions of the building will permit and must be installed promptly when and as desired.

- Confer with all other trades relative to location of all apparatus and equipment to be installed and select locations so as not to conflict with work of other Sections. Any conflicts shall be referred immediately to the Architect/Engineer for decision to prevent delay in installation of work. All work and materials placed in violation of this clause shall be readjusted to the Architect's satisfaction, at no expense to the Owner.

- Where work of this section will be installed in close proximity to work of other sections or where there is evidence that the work of this section will interfere with work of other sections, assist in working out space conditions to make satisfactory adjustment. Prepare and submit for approval 3/8" scale or larger working drawings and sections, clearly showing how this work is to be installed in relation

to the work of other sections. If the work of this section is installed before coordinating with other trades or so as to cause interference with work of other trades, make changes necessary to protect conditions without extra charge.

- Keep fully informed as to the shape, size and position of all openings required for all apparatus and give information in advance to build openings into the work. Furnish and set in place all sleeves, pockets, supports and incidentals.

- All distribution systems which require pitch or slope such as storm and sanitary drains and water piping shall have the right of way over those which do not. Confer with other trades as to the location of pipes, ducts, lights and apparatus and install work to avoid interferences.

- The Plumbing Contractor shall, with the approval of the Architect and without extra charge, make reasonable modifications in his work as required by normal structural interferences, or by interference with work of other trades, or for proper execution of the work.

- The Plumbing Contractor shall protect all materials and work of other trades from damage that may be caused by his work and shall make good any damages so caused.

- This contractor shall submit Requests for Information (RFI's) regarding the work of this section in accordance with the specifications.

D2140 -MATERIAL AND EQUIPMENT STANDARDS

- All equipment and material must be approved by the Architect/Engineer prior to use. Substitutions may be offered for review provided the material, equipment or process offered for consideration is equal in every respect to that indicated or specified and only if the term "approved equal" appears. The request for each substitution must be accompanied by complete specifications together with drawings or samples to properly appraise the materials, equipment or process.

- If a substitution of materials or equipment in whole or in part is made, the Plumbing Contractor shall bear the cost of any changes necessitated by any other trade as a result of said substitution.

- All materials, equipment and accessories provided under this section shall be new and unused products of recognized manufacturers as approved by the State Board of Plumbers and Gas Fitters.

D2150 -CERTIFICATES OF APPROVAL

- Upon completion of all work, furnish, in duplicate, certificates of inspections from the manufacturers stating that authorized factory engineers have inspected and tested the operation of their respective equipment and found same to be in satisfactory operating condition.

D2160 -SUPERVISION

- Supply the service of an experienced and competent supervisor who shall be in charge of the plumbing work at the site.

D2170 -DELIVERY, STORAGE AND HANDLING

- All manufactured materials shall be delivered to the site in original packages or containers bearing the manufacturer's labels and product identification.
- Protect materials against dampness. Store off floors, under cover, and adequately protected from damage.
- Deliver products to site and store and protect in accordance with this section.
- Thoroughly inspect all plumbing equipment and materials upon receipt at the job site for damage and correctness.

D2180 -ACCESSIBILITY

- All work shall be installed so that parts requiring inspection, operation, maintenance and repair are readily accessible. Minor deviations from the drawings may be made to accomplish this, but changes of substantial magnitude shall not be made prior to written approval from the Architect.

D2190 -ACCESS PANELS

- Furnish access panels for walls and ceilings at locations indicated on drawings or as required to permit access for adjustment, removal, replacement and servicing of all concealed plumbing equipment requiring access and all other items requiring maintenance and adjustment. In addition to where indicated on this Drawing, access doors shall be required for access to each concealed piping system isolation valve. Access panels shall be in strict conformance with Section C – Interiors. All access panels shall be submitted to the Architect for approval.
- Installation shall be by the General Contractor.
- All access panels shall be located and positioned so that the equipment can be easily reached, and the size shall be sufficient for this purpose (min. 12" x 12").

D2200 -SLEEVES, INSERTS, ANCHOR BOLTS, AND PLATES

- Be responsible for the location of and the maintaining in proper position all sleeves, inserts and anchor bolts supplied and/or set in place. In the event that failure to do so requires cutting and patching of finished work, it shall be done at this Contractor's expense without any additional cost to the Owner.
- Sleeves passing through fire walls and fire rated floors and barriers, shall be made tight using approved caulking or fireproofing materials as necessary. Fire rated material shall be UL listed and shall match the rating of the wall, floor or barrier penetrated.
- The fire resistance rating of floors, walls, and ceilings shall be maintained. UL listed firestopping shall be installed in accordance with manufacturer’s written instructions.

D2210 -SUPPLEMENTARY STEEL, CHANNELS AND SUPPORTS

- Provide all supplementary steel, channels and supports required for the proper installation, mounting and support of all plumbing equipment, piping, etc., required by the Specifications.

- Supplementary steel and channels shall be firmly connected to building construction in a manner approved by the Architect/Engineer.

- The type and size of the supporting channels and supplementary steel shall be determined by the Plumbing Contractor and shall be of sufficient strength and size to allow only a minimum deflection in conformance with the manufacturer's requirements for loading.

D2220 -HOISTING, SCAFFOLDING AND PLANKING

- The work to be done under this Section of the Specifications shall include the furnishing, set-up and maintenance of all derricks, hoisting machinery, scaffolds, staging and planking as required for the work.

D2230 -COORDINATION

- Work shall be performed in cooperation with other trades on the project and so scheduled as to allow speedy and efficient completion of the project.

- Furnish to all other trades advance information on location and size of all equipment, frames, boxes, sleeves, and openings needed for the work under this section of the specifications, and also furnish layout information and shop drawings necessary to permit trades affected by the work under this section of the specifications to install their work properly coordinated and without delay.

- Where there is evidence that work installed under this section of the specifications interferes with the work of other trades, assist in working out space conditions to make satisfactory adjustments.

- With the approval of the Architect/Engineer and without extra cost to the Owner, make reasonable modifications in work specified under this section of the specifications required to coordinate with normal structural interferences, lights, diffusers, and ductwork or for proper execution of specified work.

- If work is installed before coordinating with other trades so as to cause interference with the work of such trades, make all necessary changes in work under this section of the specifications at no additional cost to the Contract.

- Protect all materials and work of other trades from damage that may be caused by the work required under this section of the specifications and be responsible for repairing any damages caused by such work without any additional cost to the Contract.

- Where work of this section will be installed in close proximity to work of other sections or where there is evidence that the work of this section will interfere with work of other sections or existing conditions, assist in working out space conditions to make satisfactory adjustment. Prepare and submit for approval 3/8" scale or larger working drawings and sections, clearly showing how this work is to be installed in relation to the work of other sections. If the work of this section is installed before coordinating with other trades or so to cause interference with

work of other trades, make changes necessary to protect conditions without extra charge.

- The plumbing contractor shall carefully coordinate with all existing conditions at the site while preparing the coordination drawings. All work shown on the plumbing contractor's coordination drawings shall be fully coordinated with all existing conditions at the site to ensure that all work shall fit in the spaces. The plumbing contractor shall make reasonable changes to the contract drawings in order to accommodate existing conditions without extra charge.

D2240 -COORDINATION DRAWINGS

- General: General Contractor shall prepare and provide one accurately scaled set of building "base sheets" in CAD format for production of Coordination Drawings. The Coordination Drawings shall at not less than at 1/8" for all areas. General Contractor shall establish CAD layer standards for each trade and shall be responsible for distribution to each trade. The sequence of Coordination Drawings shall be Contractor-Structural-HVAC-Electrical-Plumbing-Fire Protection-Contractor. Upon review and approval of coordination drawings, the General Contractor shall provide a complete set to the owner on 4 mil reproducible mylar and electronic files in CAD format.

- The Plumbing contractor, the HVAC contractor, the fire protection contractor, the electrical contractor, and the Contractor shall coordinate all HVAC, plumbing, electrical, structural and fire protection work with that of each trade in order to:

  - Avoid interferences between general construction, mechanical, electrical, structural and other specialty trades.

  - Maintain clearances and advise other trades of clearance requirements for operation, repair, removal and testing of mechanical equipment.

  - Indicate aisle ways and access ways required on coordinated shop drawings for mechanical equipment rooms, electrical rooms.

  - Coordinate location of sleeves and inserts.

  - Coordinate installation sequence.

- Plumbing Coordination Drawings

  - The Plumbing Contractor shall prepare Coordination Drawings showing all work to be installed as part of D20. The Plumbing Coordination Drawings shall show all equipment, work, pipes, sleeves, inserts, and supports.

  - The Plumbing Contractor, after showing all of the Plumbing work, shall forward the reproducible coordination drawings to the General Contractor.

  - The Plumbing Contractor shall attend a series of meetings arranged by the General Contractor to resolve any real or apparent interferences or conflicts with the work of the other contractors or with ceiling heights shown on the drawings.

- The Plumbing Contractor shall then make adjustments to his work on the Coordination Drawings to resolve any real or apparent interferences or conflicts and forward to the Contractor.

- After any real or apparent interferences and conflicts have been resolved and incorporated into the Coordination Drawings, the General Contractor shall prepare the final Coordination Drawings and submit to the Architect.

- The Plumbing Contractor shall not install any of his work prior to the preparation of the final Coordination Drawings. If Plumbing work proceeds prior to the final Coordination Drawings, any change to the Plumbing work to correct the interferences and conflicts which result will be made by the Plumbing Contractor at no additional cost to the Owner.

- Coordination Drawings are for the Plumbing Contractor's and Architect's use during construction and shall not be construed as replacing any shop, "as-built", or Record Drawings required elsewhere in these Contract Documents.

- Review of Coordination Drawings shall not relieve the Plumbing Contractor from his overall responsibility for coordination of all work performed pursuant to the Contract or from any other requirements of the Contract.

D2250 -PIPE AND FITTINGS

- Materials and equipment shall be of the best quality manufacture, new, unused and free from all defects, and burrs. All piping shall be de-burred before installation.

- Reference to specifications or recognized authorities to establish basis of quality shall be latest edition in force at date of bidding.

D2260 -HOT WATER, HOT WATER RETURN, COLD WATER AND NON-POTABLE WATER PIPE AND FITTINGS

- Interior above ground domestic cold and hot water supply system piping shall be Type "L" hard drawn copper tubing with wrought copper, 95-5, solder joint sweat fittings. Exposed water piping at fixtures in finished areas, unless otherwise noted, shall be chromed plated (C.P.) nickel finish. All piping below ground shall be type “K” copper with wrought copper fittings and silver solder joints, or as approved by the Massachusetts State Plumbing Code.

- Exterior buried cold water 3" and larger shall be ductile iron, cement lined Class 52 with mechanical joints and retainer glands. All pipe and fittings buried in the ground shall be encased in loose 8 mil. thick polyethylene film sleeve in compliance with ANSI A21.5.

- All exterior, buried, water piping shall be provided with a warning tape installed 12” directly above the water line.

- Water piping may be CPVC pipe and fittings with solvent welded joints as allowed by code.

D2270 -SANITARY WASTE, VENT AND STORM DRAIN PIPE AND FITTINGS

- Buried or under floor shall meet the following:
    - Buried or under floor shall be service weight cast-iron soil pipe and fittings, coated tar or asphaltum. Joints to be made mechanical joint with resilient gaskets.
    - Marking - Each length of pipe and each fitting shall be plainly marked with the manufacturer's initials or registered trademark by which he can be readily identified, and with letters to indicate the proper classification, as follows: SV Service Weight.
    - Coating - The pipe and fittings shall be uniformly coated with coal tar pitch, or similar bituminous material suitable for the purpose, that is adherent and without a tendency to scale or become brittle. The coating shall be applied to all surfaces, except in threaded openings.
    - The cast-iron pipe shall meet the specifications of the seal of the Cast-Iron Soil Pipe Institute.
    - Sanitary, Vent and Storm Drain piping systems for both above and below ground applications may be schedule 40 PVC with solvent welded joints as allowed by code.
- Above grade shall be one of the following:
    - Above ground Sanitary, Vent piping shall be service weight cast iron pipe with plain ends and stainless steel hubless type couplings for pipe sizes larger than 2”. Pipe sizes 2” and smaller shall be DWV copper tubing with drainage pattern fittings and solder joints.
    - Sanitary, Vent and Storm Drain piping systems for both above and below ground applications may be schedule 40 PVC with solvent welded joints as allowed by code.

D2280 -UNIONS AND FLANGES

- Unless otherwise specified herein, unions for copper and brass piping two inches and smaller shall be 125 pounds (steam working pressure) brass ground joint type. Larger than 2" in diameter shall be 150 pounds flat faced brass flanges conforming to ANSI Standard B16.24. Flanges shall have copper clad steel bolts and nuts and 1/16" minimum thickness red rubber full faced gaskets.
    - Where brass flanges and ferrous flanges are to be joined, ferrous flanges shall be full faced.
    - Mating of ferrous and non-ferrous flanges shall be separated with rubber gaskets (1/16" minimum thickness) and Teflon liners installed in the bolt holes. Bolt holes shall be drilled to receive the teflon liners. Physical contact between the ferrous and non-ferrous flanges including the bolts, nuts, and washers will not be permitted.
    - Unions or flanges shall be installed at all equipment connections.

VALVES

- Water Valves
  - Valves used for throttling of the flow shall be butterfly type with memory stop. Ball valves shall not be acceptable on hot water return piping.
  - Shut-off valves in the interior domestic water systems, 2" and smaller shall be 600-pound, full port, WOG ball valves with stainless steel ball and stem; 2-1/2" and larger shall be 200-pound Working Pressure butterfly valves with stainless steel stem and disc. Shut off valve on discharge side of water meter, 2-1/2" and 3" shall be 300-pound WOG rising stem gate valve; 4" and larger shall be iron body, bronze mounted OS&Y gate 200-pound WOG. Shut off valve on street side of water meter shall be iron body, bronze mounted OS&Y gate 200-pound WOG.
  - Check valves shall be 125-pound class for domestic water and 175 pounds for fire protection.
  - Valves shall be provided with Buna-N, TFE or EPDM seats suitable for the service intended.
  - The pressure classification for valves specified herein are working steam or water, oil, gas (WOG) pressure ratings.
  - Lever handles on all valves shall be color coded in conformance with ANSI Standard A-13.1.
- Valves in the interior domestic water piping systems (cold water, hot water, and hot water return) shall be as manufactured by Mueller, Jones, or approved equal. Manufacturer's model numbers used herein are intended as a guide to quality and type of valve to be provided.
  - Ball valves, 2" and smaller: bronze body, solder ends, Apollo 77-100/200 series, TFE seats, lever handle.
  - Butterfly valves, 2.5" and larger: Apollo lug type model 141/143, cast iron body, EPDM or Buna-N seat, 10 position lever handle.
  - Gate valves shall be Nibco T/S134 up to 3" size and F-617-0 for piping 4" and larger.
  - Check valves, 3" and smaller: Conbraco 61 series, bronze body, stainless steel spring, RTFE ball check.
  - Drain valves: Apollo 78-100 series 3/4" all bronze hose end ball valve with cap and chain, provide Conbraco hose end vacuum breaker.
  - Strainers: Conbraco 59 series, bronze body, threaded or solder ends to suit, stainless steel screen, 400-pound WOG.
  - Shutoff valves on the domestic gas system, Apollo, Walworth or approved equal, 2-1/2" and smaller shall be Apollo 80-100 Series screwed end ball

valves with Tee Type, approved handles. 3" and larger shall be Walworth Fig. 1700F lubricated plug valves.

- Non-freeze Wall Hydrants shall be by Woodford model B65 enclosed in a lockable, recessed wall box. The wall hydrant shall have a 3/4" supply and shall be automatic draining, anti-siphon with integral vacuum breaker.

- Hose Bibbs shall be provided in each toilet room as indicated and shall be Woodford model 26 in chrome finish with cold water supply and 3/4" threaded hose end vacuum breaker and loose key handle. Hose bibbs in toilet rooms shall have 1/2" supply inlet, hose bibbs in mechanical rooms shall have 3/4" supply inlet.

- All valves to be lead free.

D2300 -HANGERS, INSERTS AND SUPPORTS

- All piping shall be rigidly supported from the building structures by means of approved hangers and supports. Piping shall be supported to maintain required grading and pitching of line, to prevent vibration and to secure piping in place, and shall be arranged so as to provide for expansion and contraction. In no case shall risers or mains contact building structures. Seismic restraints shall be provided on gas piping systems as required.

- All materials specified in this section which occur above suspended ceilings shall be supported directly from the building structures. The suspended ceiling system shall not be utilized to support any plumbing materials. All hangers, inserts and supports shall be Carpenter Patterson, Calco, Walworth, or equal.

- All hangers shall be secured to approved adjustable type, stainless steel inserts wherever possible and practicable. Field drilling, where required, shall be by the Plumbing Contractor. The use of explosives is prohibited.

- All sanitary, waste, vent, storm drain and water pipes shall have friction clamps at each floor.

- Hangers shall be installed, as required, to meet code compliance as to location/spacing and Manufacturer's Standardization Society (MSS) Standard Practice Bulletins SP-58 and 69.

- Hanger material shall be compatible with piping materials with which it comes into contact unless otherwise noted.

- Hangers shall be installed, in addition to the above, at all changes of direction (horizontal and vertical), valves and equipment connections. Hangers shall be located so that their removal is not required to service, assemble or remove equipment.

- Horizontal runs may use Type "1A" band hangers up to 4" size. Piping larger than 4" shall be provided with clevis type.

- Vertical support shall be by means of riser clamps (anchors with split ring type allowable up to 2" size only) and adjustable pipe support with flange anchored to floor.

- Where three or more pipes are running parallel to each other, factory fabricated gang pipe hangers with pipe saddle clips or rollers may be used in lieu of the hereinbefore specified hangers. These hangers shall be sized to provide for insulation protectors as hereinafter specified. Pipe saddle clips shall be not less than 16-gauge metal. Where pipe rollers are provided for insulated copper piping, insulation protectors shall be provided at each set of rollers and filled with a section of heavy density fiberglass pipe covering that extends a minimum of 12" beyond the roller.

- Insulation protectors (shields) for horizontal piping shall be constructed of galvanized steel formed to a 180-degree arc and 12" long, 18 gauge for hangers 5" in size and smaller, 16 gauge for hangers larger than 5" in size.

- Rods, clamps and hangers shall be electro-galvanized coated.

- Valve and piping supports, from the floor, shall be adjustable pipe support and complete with pipe standard and flange, anchored to floor. Supports shall be installed at each control valve, riser tee or elbow and where any unsupported section exceeds 4'-0" in length measured along piping centerline.

D2310 -SLEEVES

- All pipes passing through floors, walls, or partitions shall be provided with sleeves having an internal diameter with a minimum of two inches larger than the outside diameter of the pipe or insulation on covered lines.

- Sleeves through outside walls and slabs on grade shall be Schedule 40 galvanized steel pipe with a 150-pound steel slip on welding flanges, welded at the center of the sleeve and shall be painted with one coat of bitumastic paint, inside and outside.

- Sleeves through masonry floors and interior masonry walls shall be Schedule 40, black, steel pipe. Sleeves through interior non-masonry walls or partitions shall be 22-gauge galvanized sheet steel.

- The sleeves through outside walls and slab on grade shall be provided with pipe to wall penetration closures. Seals shall be mechanical type of interlocking rubber links shaped to fill space between pipe and sleeve. Links shall be assembled with bolts to form a belt around the pipe with pressure plate under each bolt head and nut. After seal assembly is positioned, tightening of bolts will provide watertight seal. The Plumbing Contractor shall determine the required inside diameter of each individual sleeve before ordering, fabricating or installing. The inside diameter of each sleeve shall be sized as recommended by the manufacturer to fit the pipe and Thunderline Seal to assure a watertight joint.

- Sleeves through walls shall terminate flush with face of wall. Sleeves through floor shall terminate 1" above finished floor.

- Required fire resistance of floors and walls shall be maintained where penetrations occur. Fire stopping at sleeves shall be installed per manufacturer recommendations. Fire stopping material shall be UL listed for the service and fire rating. Provide asbestos-free firestopping material capable of maintaining an effective barrier against flame, gases, and temperature. Provide noncombustible firestopping that is nontoxic to human beings during installation or during fire condi-

tions. Devices and equipment for firestopping service shall be UL FRD listed or FM P7825 approved for use with applicable construction, and penetrating items.

- Fire Hazard Classification: Material shall have a flame spread of 25 or less, a smoke developed rating of 50 or less when tested in accordance with UL 723 or UL listed and accepted.

- Firestopping Rating: Firestopping materials shall be UL FRD listed or FM P7825 approved for "F" and "T" ratings at least equal to fire-rating of fire wall or floor in which penetrated openings are to be protected, except that "F" and "T" ratings may be 3 hours for firestopping in through-penetrations of 4-hour fire rated wall or floor.

- Escutcheons shall be provided with a set screw to properly hold escutcheon in place and provided at all exposed floor and wall penetrations. Escutcheons on C.P. piping shall be chrome plated.

D2320 -CLEANOUTS

- Bodies of cleanout ferrules in hub and spigot or no-hub piping shall be standard pipe size conforming in thickness to that required for pipe and fittings, and shall extend not less than 3/4" high. Cleanouts in copper waste piping shall be soldered brass cleanout fittings with extra heavy brass screw plugs of the same size as the pipe line. Cleanouts in threaded waste piping shall be cast iron drainage "T" pattern 90-degree branch fittings with extra heavy brass screw plugs of the same size as the pipe.

- Floor cleanouts shall be J.R. Smith, Zurn, or Wade, heavy-duty cast-iron body with ductile iron cover.

- Exterior cleanouts (GCO) to grade shall be same as for floor cleanouts and shall be encased in concrete at a minimum of 6" beyond the greatest outside dimension and a minimum of 6" depth. Top of cleanout shall be set 1/2" below finished grade and concrete collar shall be shaped to finished grade.

- Wall cleanouts, ZN1445-1 cast iron supreme cleanout tee with cadmium plated plug, lead seal and round stainless-steel access cover with securing screw, or approved equal.

- Provide owner with three (3) wrenches for removing flush cleanout plugs.

- Plastic Cleanout plugs will not be allowed.

D2330 -INSULATION

- General: The pipe covering specified herein for piping system shall be provided in strict accordance with the manufacturer's printed instructions, the best practice of the trade and to the full intent of this specification.

  - The sealers, tapes, adhesives and mastics used in conjunction with the installation of the pipe covering specified herein shall possess the maximum possible fire-safe qualities available and shall be of a type approved by Factory Mutual, Factory Insurance Association or National Fire Protection Association.

- Valves, fittings, flanges and accessories shall have the same thickness of pipe covering applied as the adjacent pipe. Pipe covering for these items shall be factory PVC molded type (Zeston or approved equal).

- Longitudinal seams and butt joint shall be sealed with a fire retardant, vapor barrier adhesive.

- Insulation shall be provided for all Interior potable and non-potable Cold Water, Hot Water and Hot Water Return Systems Piping and fittings and all horizontal storm drain piping including all roof drain bodies. Insulation shall be provided on these piping systems regardless of pipe material used.

- All interior water piping shall be insulated and shall be 4-pound density, fiberglass with factory applied white, fire retardant, reinforced, vapor barrier jacket, 1" thick for piping up to 1-1/4" and 1-1/2" for piping 1-1/2" and larger. Insulation shall be continuous through sleeves.

- Ends of insulation at termination points shall be sealed to the pipe with a premolded PVC type fitting. Pipe fittings and valves shall be provided with premolded PVC covers with fiberglass inserts.

- Pipe, pipe fittings and valve insulation in all mechanical rooms, non-conditioned wet areas the basement and in all areas where the piping will be exposed to view shall be provided with 20 mil. PVC continuous covers in addition to the vapor barrier Jacket. Fittings and seams shall be solvent welded.

- Insulation at hangers shall be protected with galvanized steel shields.

- Fire Hazard Rating: Insulation materials, coatings and other accessories shall individually have a fire hazard rating not to exceed 25 for flame spread and 50 for fuel contributed and smoke developed. Ratings shall be determined by U.L. "Test Method for Fire Hazard Classification of Building Materials', No. 823 or NFPA No. 225 or ASTM E84.

- All water, waste, vent and storm drain piping installed exposed to view shall be covered with insulation as described above and the insulation shall be provided with white PVC covers for all piping, valves and fittings. The PVC covers shall be sealed by solvent welding. Tapes shall not be used.

- Insulation shall be provided for all hot water, cold water, hot water return, non-potable water and horizontal storm drain pipe and fittings including roof drain bodies, regardless of pipe material used.

D2340 -SHOCK ABSORBERS

- Shock absorbers shall be system rated water hammer arrestors by Precision Plumbing Products, Sioux Chief or approved equal. Arrestors shall be threaded ends. Arrestors shall be sealed air chamber piston type with “O” ring seals, type “K” hard drawn copper barrel Seal Lubricant shall be listed for use in potable water systems. Size according to manufacturer’s recommendations. Install where indicated and in accordance with "Standard P.D.I. - Wh201".

D2350 -PLUMBING FIXTURES

- Plumbing fixtures shall be as indicated on the drawings. Mounting heights of all accessible fixtures shall be in strict accordance with the requirements of the Massachusetts Architectural Access Board (AAB) for handicap accessible fixtures and ADA requirements. The plumbing contractor shall review the architectural drawings for the installation locations, installation dimensions and mounting heights of all plumbing fixtures.

- Water Consumption:
    - Water Closet 1.28 GPF
    - Urinal 0.125 GPF
    - Lavatory 0.5 GPM
    - Sink 1.5 GPM
    - Shower 1.5 GPM

D2360 -HOT WATER HEATER

- Duplex, Indirect fired, 250 Gallon Storage, ASME tank, 800 MBH input, 380 GPH recovery.
- Vacuum Relief: Provide vacuum relief on cold water supply to heater locate a minimum of 6" above the top of the tank. Relief valve shall be single or multiple installation as required to provide a cross sectional area equal to not less than one pipe size smaller than the tank supply or drain, whichever is greater.
- Provide electronic thermostatic mixing valves, 140F system and 120F system.
- Provide emergency fixture mixing valve for 60F tempered water loop.
- Provide thermal expansion tank.

D2370 -GAUGES AND THERMOMETERS

- Pressure Gauges:
    - Gauges shall be installed with suitable "T" handle gauge cocks to permit servicing. Unless otherwise specified herein, all gauges shall be not less than five inch diameter, dial type, stainless steel case with black flange, aluminum peaked ring, phosphor bronze, bourdon tube, 1/4" bass N.P.T. male socket connection with wrench flats, white lithographed steel dial with black numbers and gradation. Dial gradations reading in "PSIG" shall be such that the normal operating pressure shall be indicated near the middle of the scale.
    - Gauges shall be installed at outgoing side of water meter, incoming and outgoing sides of reduced pressure backflow preventer.
- Thermometers:

- Thermometers shall be hermetically sealed, bimetal, dial thermometers with stainless steel cases, anti-paralox dials with raised jet-black figures, stainless steel stems and brass separable sockets. Thermometers shall be vapor or mercury actuated with separable wells. Thermometers shall be graduated to "°F." and shall have a range so that the normal operating temperature will be in the middle of the scale.
- The face diameter of dials on thermometers shall not be less than 5".
- Thermometers shall be installed at hot water heater discharge and as indicated on the plans, details and riser diagrams.
- The accuracy of all gauges and thermometers shall be within one percent of the scale range.

D2380 -IDENTIFICATION

- General
  - All equipment and piping provided under this Section of the Specifications shall be marked for ease of identification.
  - Marking shall be done using self-adhering labels applied to clean, smooth surfaces. All lettering shall have a sharply contrasting background for ease of identification. Colors shall be in accordance with ANSI Standards. Samples of stickers together with color schedules shall be submitted for approval.
  - The Plumbing Contractor shall label all equipment. The plumbing contractor will provide the owner with excel spreadsheets of all items to be labeled, the owner will assign numbers, assign names, print out labels and provide subcontractors with labels. The plumbing contractor will then affix the labels to the equipment. Brass tags are eliminated. As-builts and manuals will reference the owner provided numbers and names.
- Equipment
  - Equipment marking shall be prominently located on the normally visible side of the equipment.
  - Equipment identification designations shall be taken from equipment schedules as indicated on the Drawings.
- Pipe Identification
  - Provide color coded pipe identification markers on all piping in the building installed under this Section. Pipe markers shall be heavy plastic faced cloth labels with heat resistant backing, "Set Mark" by Seton Nameplate Corporation, Zipper Tubing Co., or equal by the W. H. Brady Company or approved equal.
  - Provide an arrow marker with each pipe content marker to indicate the direction of flow.

- Piping mains shall be labeled at 20' intervals and on entrance and exit from the Mechanical Room, adjacent to each valve and at both sides of wall penetrations. This work shall be done after finish painting has been completed.

- The following color coding shall be used with names in black letters on backgrounds indicated:

- In general, a 2" high legend shall be used for pipe lines 4" diameter and larger, and a 3/4" high legend shall be used for pipe lines 3" diameter and smaller.

- All markers shall be OSHA approved.

- All Exposed piping systems shall be painted in accordance with ANSI standards.

- Valve Tags

  - All valves on pipes of every description shall have neat circular black and white laminated fibre-engraved white showing through tags of at least 1-1/2" in diameter, attached with a brass hook to each valve stem. Stamp on these valves tags in letters, as large as practical, the number of the valve and the service such as indicated on the "Valve List". The numbers on each service shall be consecutive. All valves on tanks and pumps shall be numbered by 3" black and white laminated fibre-engraved white showing through discs with white numbers 2" secured to stem of valves by means of brass hooks or small solid link brass chain.

  - The valve numbers shall correspond with numbers indicated for valves and controls on two printed valve lists prepared by the Plumbing Contractor. These printed lists shall state the numbers and locations of each valve and control and the section, fixture or equipment which it controls, and other necessary information, such as requiring the opening or closing of another valve when one valve is to be opened or closed.

  - The valve lists shall be prepared in a form to meet the approval of the Architect and shall be mounted framed under glass at the direction of the Owner.

D2390 -TESTING

- General

  - All labor, materials, instruments, devices and power required for testing shall be provided by the Plumbing Contractor. The tests shall be performed in the presence and to the satisfaction of the Owner's Representative and such other parties as may have legal Jurisdiction. No piping in any location shall be closed up, furred in, or covered before testing.

  - Where portions of piping systems are to be covered or concealed before completion of the project, those portions shall be tested separately in the manner specified herein for the respective entire system.

  - Any piping or equipment that has been left unprotected and subject to mechanical or other injury shall be retested in part or in whole as directed.

- The Architect/Engineer retains the right to request a recheck or resetting of any pump or instrument by this contractor during the guarantee period at no additional cost to the Contract.

- Repair or replace any defective work with new work without extra charge to the Contract. Repeat tests as directed, until the work is proven to meet the requirements specified herein.

- Restore to its finished condition any work, damaged or disturbed, provided by other contractors and engage the original contractor to do the work of restoration to the damaged or disturbed work.

- The fixtures shall be tested for stability of support and satisfactory operation. The piping shall be tested when directed by the Contractor for stability.

- After the fixtures are set and connected, and the piping systems to same have been tested, this Plumbing Contractor shall turn water on the fixtures, and equipment, fill the traps, etc., and the proper operation of all items shall be demonstrated by him in the presence of and to the satisfaction of the Architect or their designated representatives.

- Caulking of screwed joints or holes in piping will not be acceptable.

- This Plumbing Contractor shall notify the any inspectors having jurisdiction, a minimum of 48 hours in advance of making any required tests so that arrangements may be made for their presence to witness his scheduled tests.

- Specific:

  - Sanitary and Vent (Waste and Vent) Piping Systems:

    - Before the installation of fixtures, and equipment each system including vents shall have all necessary openings plugged to permit the entire system to be filled with water to the level of the vent stack or roof drain of each system above the roof where practical. Each system shall hold this water for four hours without a drop-in water level.

    - Where a portion of the system is to be tested, the test shall be conducted in the same manner as specified herein for the entire system, except a vertical sack ten feet above the highest horizontal line to be tested may be installed, and filled with water to maintain sufficient pressure. A pump may be used to supply the required pressure. The pressure shall be maintained for a minimum of four hours for sufficient time to permit inspection of all joints.

  - Potable and non-potable Hot Water, Hot Water Return and Cold-Water Piping Systems:

    - Upon completion of the roughing-in and before setting fixtures and final connection to all equipment, all water piping systems shall be tested to a hydrostatic pressure of 125 PSIG.

    - Each system's test shall be maintained for eight hours without a drop-in pressure.

- After testing, provide complete adjustment of all parts of each water system until design distribution or balancing is obtained throughout.

D2400 -DISINFECTION, CLEANING AND ADJUSTING

- Disinfection

  - Each water system shall be cleaned and disinfected by this Plumbing Contractor. Cleaning and disinfection shall be performed after all pipes, valves, fixtures and other components of the system are installed, tested and ready for operation.

  - All water piping shall be thoroughly flushed with clean potable water, prior to disinfection, to remove dirt and other contaminants. Screens of faucets shall be removed before flushing and re-installed after completion of disinfection.

  - Disinfection shall be done using sodium hypochlorite in the following manner:

    - A service cock shall be provided and located at the water service entrance and at each branch piping system to a phase. The disinfecting agent shall be injected into and through the system from this cock only.

    - The disinfecting agent shall be injected by a proportioning pump or device through the service cock slowly and continuously at an even rate. During disinfection, flow of disinfecting agent into main water supply shall not be permitted.

    - All sectional valves shall be opened during disinfection. All outlets shall be fully opened at least twice during injection and the residual checked with orthotolidin solution.

    - When the chlorine residual concentration, calculated on the volume of water the piping will contain, indicates not less than 50 PPM (parts per million) at all outlets, then all valves shall be closed and secured.

    - The residual chlorine shall be retained in the piping systems for a period of not less than 24 hours.

    - After the retention, the residual shall be not less than five parts per million. If less, then the process shall be repeated as described above.

    - If satisfactory, then all fixtures shall be flushed with clean potable water until residual chlorine by orthotolidin tests shall not be greater than the incoming water supply (this may be zero).

  - All work and certification of performance shall be performed by approved applicators or qualified personnel with chemical and laboratory experience. Certification of performance shall indicate:

    - Name and location of the job and date when disinfection was performed.

    - Material used for disinfection.

    - Retention period of disinfectant in piping system.

- PPM chlorine during retention.
- PPM chlorine after flushing.
- Statement that disinfection was performed as specified.
- Signature and address of company/person performing disinfection.

- Upon completion of final flushing (after retention period), this Contractor shall obtain a minimum of one water sample from each hot and cold-water line and submit samples to a State-approved laboratory. Samples shall be taken from the faucets located at highest floor and furthest from meter or main water supply. The laboratory report shall show the following:
  - Name and address of approved laboratory testing the samples.
  - Name and location of job and date the samples were obtained.
  - The coliform organism count (an acceptable test shall show absence of coliform organisms).
- If analysis does not satisfy the above minimum requirements, the disinfection procedure shall be repeated.
- Before acceptance of the systems, the Plumbing Contractor shall submit to the Architect/Engineer for his review, three (3) copies of Certification of Performance as specified above.
- Under no circumstances shall the Plumbing Contractor permit the use of any portion of domestic water system until properly disinfected, flushed and certified.

- Cleaning and Adjusting
  - At the completion of the work, all parts of the installation shall be thoroughly cleaned. All equipment, pipe, valves and fittings shall be cleaned of grease, metal cuttings and sludge which may have accumulated by operation of the system for testing.
  - Any stoppage or discoloration or other damage to parts of the building, its finish, or furnishings, due to the Plumbing Contractor's failure to properly clean the piping system shall be repaired by the Plumbing Contractor at no increase in Contract costs.
  - At the completion of the work, all water systems shall be adjusted for quiet operation.
  - All automatic control devices shall be adjusted for proper operation.
  - All plumbing fixtures and exposed metal work shall be adjusted for proper operation. Floor drain strainers and traps shall be cleaned of all debris.
  - All items of equipment shall be thoroughly inspected and any items dented, scratched or otherwise damaged in any manner shall be replaced or repaired

and painted to match the original finish. All items so repaired and refinished shall be brought to the attention of the Architect for inspection and approval.

D2410 -SYSTEMS

- Sanitary and Storm, and Vent Piping (Interior)

  - The Plumbing Contractor shall be responsible for checking each pipe for alignment, center line elevation and invert grade for underground installations.

  - At times when work is not in progress, open ends of pipe and fittings shall be securely closed so that no trench water, earth or other substance will enter the pipe or fittings. Pipe laid through rock excavation shall rest on a six inch of well compacted sand.

  - The Sanitary and storm drainage piping three inches and smaller in diameter shall pitch a minimum of 1/4 inch per foot, and piping four inches and larger in diameter shall pitch a minimum of 1/8 inch per foot.

  - The vent stacks shall be connected as shown and extended through the roof. Waste and vent pipes shall be concealed, unless otherwise noted. All acid vent systems shall be kept separate from the sanitary vent systems.

  - Branch connections to each drainage system shall be made with "Wye" and long turn "Tee Wye' fittings. Installation of short radius 1/4 bends, common offsets, double hub fittings and saddles will not be approved. Only fittings conforming to the Code shall be installed.

  - The changes in direction of each drainage system shall be made with "Wye" branches and 1/8 bends. Provide long sweep bends at bottom of stacks with a vertical cleanout just above the floor at places where a "Wye" and 1/8 bends at bottom of stacks and end cleanouts cannot be installed.

  - Every fixture, unless otherwise noted, shall be separately trapped and the traps must be vented, unless an approved battery or wet vented system is being installed. Floor drains shall be considered as a fixture.

  - Vents shall be connected to the discharge of each trap system, then carried individually to a point above the flood level of the fixture before connecting with any other vent pipes. Pitch the branch vents back to the fixtures.

  - Collect individual vent pipe together in branch vent lines and connect to vent stacks. Wherever possible, vent stack offsets shall be made with 45-degree fittings. The vents passing through the roof shall be a minimum size of one inch larger than connected vent stack. All acid vent systems shall be kept separate from Sanitary vent systems and shall be carried up thru the roof separately.

  - Cleanouts shall be provided in drainage piping at changes in directions, at foot of stacks or other required points so that all portions of the lines will be readily accessible for cleaning or rodding out.

- Cleanouts shall be of the same size as the pipe installed in up to four inches in diameter and not less than four inches in diameter for piping larger than four inches in diameter.

- The maximum horizontal distance between cleanouts; in piping four inches in diameter and smaller shall not be more than 50' apart; in piping five inches in diameter and larger shall not be more than 100' apart.

- Traps on sanitary piping not integral with fixtures and in accessible locations shall be provided with a brass trap screw protected by the water seal, and will be regarded as a cleanout.

- Test tees with brass cleanout plugs shall be provided at the foot of all vertical waste and storm drainage stacks and at each floor. Wherever cleanouts on vertical lines occur concealed behind finished walls, they shall be extended to back of finished wall and a wall plate shall be provided.

- Buried Sanitary and Vent Piping

  - All pipes shall be accurately laid to lines and elevations shown on the drawing with particular care so that there are no sags in the slope and that a true and even surface is given to the invert. No pipe shall be covered with backfill until it has been approved by the Contractor and the governing authorities.

  - Sewer pipe shall be laid in a straight line and to uniform rate of grade as shown on drawings. Each length shall be checked for line and grade before competing joint.

  - Pipe bedding shall be in accordance with the Massachusetts State Plumbing Code.

  - Pipe joints and jointing material shall be made in accordance with the manufacturer's recommendations.

  - Promptly install all piping after the excavation or cutting of same has been done, with all openings to be left overnight or longer, closed tightly.

  - Excavation for all underground lines shall be kept open until the drainage systems or portions thereof have been inspected, tested and approved.

  - If an inspection of the completed sanitary gravity sewers or any part thereof shows any manholes, pipes, or joints which allow the infiltration of water, the defective work or material shall be replaced or repaired as directed by the Owner's Representative or Architect/Engineer.

- Potable Hot Water, Hot Water Return and Cold-Water Piping

  - Vacuum breakers and/or backflow preventers shall be installed on supplies to each piece of equipment, and hose-end valved connection, as required, to prevent back-siphonage and backflow.

  - Branch lines from water service or main lines shall be taken off the top or bottom of main, using such crossover fittings as may be required by structural or installation conditions. All water service pipes, fittings, and valves shall

be kept a sufficient distance from other work and not less than one inch between coverings on the different services.

- Water piping shall be run parallel and graded evenly to the drainage points. There shall be a minimum 1/2" hose-end drain valve with hole-end vacuum breaker provided for each low point in the piping, so that all parts of each water system can be drawn-off. Piping 2" and larger shall have a 3/4" size drain valve.

- All piping connections to equipment shall be provided with unions or flanges to permit convenient disassemble for alterations and repairs.

- No piping shall be installed in a manner to permit back siphonage or backflow of any flow of water from the waste non-potable or process system into the domestic water systems or their distribution piping under any conditions. Approved backflow preventers shall be installed where cross-connections are required.

- Where flanges are installed in the water systems, install red rubber gaskets between each pair of flanges.

- Heating and/or bending of copper tubing to eliminate the installation of fittings will not be permitted (exception: flexible risers between fixture stop and kitchen/lavatory faucet).

- Piping systems shall be kept clean during all phases of work. Open ends of incomplete piping shall be protected to prevent the entrance of foreign materials.

- Pipe shall be cut accurately to measurements established at the site and shall be worked into place without springing or forcing.

- Provide copper plated friction clamps on the cold-water supplies to each water closet and urinal flushometer. Friction clamp shall be firmly clamped to the pipe and shall be firmly attached to the adjacent wall structure.

D2420 -GENERAL INSTALLATION REQUIREMENTS

- Piping Installation

  - Install piping approximately as shown on the drawings and as directed during installation by the Architect/Engineer.

  - Piping shall be installed as straight and direct as possible forming right angles or parallel lines with building walls, other piping and neatly spaced. Rough-ins at lavatories shall be centered at fixture.

  - The horizontal runs of piping, except where concealed in partitions, shall be installed as high as possible.

  - Piping or other apparatus shall not be installed in such a manner so as to interfere with the full swing of the doors and access to other equipment.

- The arrangement, positions and connections of pipes, fixtures, drains, valves, and the like, indicated on the drawings shall be followed as closely as possible, but the right is reserved by the Architect/Engineer to change locations and elevations to accommodate the work, without additional compensation for such change.

- It shall be possible to drain the water from all sections of cold-water piping system. Pitch piping back to drain valves.

- Screwed piping of brass or chrome plated brass shall be made up with special care to avoid marring or damaging pipe and fitting exterior and interior surfaces.

- Small fittings shall be screwed up close to the shoulders of male threads. Lampwick, cord, wool, or any other similar material shall not be used to make up thread joints.

- Screwed pipe and copper tubing shall be reamed smooth before installation.

- All exposed piping in connection with fixtures and where exposed on finished walls or to view, shall be chrome plated. Where chrome plated piping is installed, cut and thread pipe so that no unplated pipe threads are visible when the work is completed.

- Reducing fittings, unless otherwise approved in special cases, shall be provided in making reduction in size of pipe. Bushings will not be allowed unless specifically approved.

- Remove and replace with new materials, any copper or brass piping (chrome plated or unplated) and valves showing visible tool marks.

- Vertical risers shall be firmly supported by riser clamps, properly installed to relieve all weight from the fittings.

- Any piece of pipe six inches or less in length shall be considered a nipple.

- All water service piping shall be kept a sufficient distance from other work to permit finished covering to be not less than I" from other work.

- The pipe and fittings shall be manufactured in the United States of America and in accordance with the Commercial Standards, American National Standards Institute and American Society of Testing Materials.

- Hanger Installation

  - All piping shall be supported from the building structure by means of approved hangers and supports, to maintain proper grading and pitching of lines, to prevent vibration and to secure piping in place, and shall be so arranged as to provide for expansion and contraction.

- Maximum spacing of hangers on runs of pipe (vertical and horizontal) having no concentration of weight shall be as follows:

S C H E D U L E			
MATERIAL	Steel	Copper	PVC
Pipe Size (inches)	Hanger Spacing in Feet/Pipe		
.50	6	6	
.75	8	6	
1.00	10	6	
1.25	10	10	
1.50	10	10	
2.00	10	10	
2.50	10	10	
3.00	10	10	
3.50	10	10	
4.00	10	10	
5.00	10		
6.00	10		
8.00	10		

- Maximum spacing of hangers on soil pipe shall be five feet or at each fitting on straight lengths to maximum of 10' and hangers shall be provided at either side of all changes in direction. Vertical Hanger rods to support piping from the structure or supplementary steel shall not exceed four feet in total length vertically, this Contractor shall provide factory fabricated channels and all associated accessories.

- Friction clamps shall be installed at the base of the plumbing risers and at each floor (above or below floor slabs). Friction clamps installed above floor slabs shall not be supported from or rest on floor sleeves.

- Provide hangers at a maximum distance of two feet from both sides of all changes in direction (horizontal and vertical), on both sides of concentrated loads (equipment) and at valves.

- Hangers, in general, for all horizontal piping shall be A Band type hanger for piping up to 4' size and Clevis type for piping 5" and larger. These hangers shall be sized to fit the outside diameter of the pipe insulation protectors (sheet metal shields) specified herein. Gang type hangers may be used for supply piping up to 3" size where applicable and in conformance with manufacturer's recommendations.

- All vertical drops and runouts including insulated pipes shall be supported by split ring hangers with extension rods and wall plates or stamped type up to 2" size only.

- Provide on all horizontal insulated lines, pipe covering protectors (shields) at each hanger. Each protector shall be sized to fit the outside diameter of the Pipe insulation.

- Lock nuts or retaining straps shall be provided with all beam clamps.
- All supplementary steel including factory fabricated channels and associated accessories, including 12" long sheet metal shields, throughout both suspended and floor mounted shall be provided by this Contractor and shall be subject to the approval of the Architect/Engineer.
- Hangers shall not pierce the insulation on any insulated pipe except when prior approval is given.
- Wire, tape or wood fastenings for shims or support of any pipe or tubing shall not be used.
- Remove all rust from the ferrous hanger equipment (hangers, rods, and bolts) and apply one coat of galvanized paint immediately after erection.
- Piping at all equipment and each control valve shall be supported to prevent strains or distortions in the connected equipment and control valves. Piping and equipment shall be supported to allow for removal of equipment, valves and accessories with a minimum of dismantling and without requiring additional support after these items are removed.
- All piping shall be independently supported from the building structure and not from the piping, ductwork, conduit or ceiling suspension systems of other systems.
- Installation of hangers which permit wide lateral motion of any pipe will not be acceptable.
- All hangers in contact with uninsulated piping shall be compatible with piping material.
- Seismic hangers and bracing shall comply with local Building Codes.

- Installation of Sleeves, Inserts and Escutcheons
  - Sleeves in floors shall set one (1) inch above the finished floor surface or as indicated on the Architectural Drawings.
  - Sleeves through interior masonry or non-masonry walls or partitions shall be set flush with the finished surfaces of the wall or partition.
  - Field drilling for inserts required for work under this section of the specifications shall be provided by the Plumbing Contractor.
  - Each interior wall or floor sleeve shall be firestopped to provide equivalent fire resistance to floor or wall penetration. Each sleeve penetration thru the slab on grade shall be made gas tight.
  - Escutcheons shall be installed around all exposed insulated or bare pipe, passing through a finished floor, wall or ceiling. Escutcheons shall fit snugly around the bare or insulated pipe. Escutcheons shall be chrome plated cast brass at fixture supplies and traps where exposed. Spun bell type escutcheons in these locations are unacceptable.

- Valve Installation: There shall be valves where indicated on the drawings and where specified as follows:
    - At building service entrances, all supply risers, branches to groups of fixtures, branches to separate fixtures, equipment, wall hydrants, hose bibbs, connections to other systems and sectionalizing points in each system.
    - Each fixture supply shall have a separate angle stop or straight stop finished like the pipe it services.
    - Each piece of equipment shall have isolation valves for each service connected or at inlet and outlet of equipment with single service.
    - At the low points of each water system including trapped sections, provide a tee with 1/2" branch and ball valve with 3/4" hose end vacuum breaker and attached chain with cap.
    - Valves shall be located to permit easy operation, replacement or repairs.
    - Provide access panels where valves would otherwise be inaccessible.

D2430 -PIPE COVERING INSTALLATION

- Before pipe covering is applied, all pressure tests shall have been performed and approved.
- Pipe covering shall be applied over clean, dry surfaces.
- Pipe covering shall be continuous and shall be carefully fitted with side and end joints butted firmly and tightly together finished as specified herein.
- Pipe covering and auxiliaries shall be kept dry during storage and application.
- Adhesives, cements and coatings shall not be applied when the ambient temperature is below 40 ºF.
- Valve bodies shall have covering applied up to the stem.
- It is the intent of this Specification that all vapor barriers be sealed and be continuous throughout. Staples shall not be used on vapor barrier jackets.
- Where pipe covering ends occur at equipment or fixtures, end caps on the covering shall be provided.
- Adequate operating clearances shall be provided at control mechanisms.
- Pipe covering for flanges shall overlap the adjoining pipe by a minimum of three inches on each side.
- Pipe covering shall be provided on all piping passing through ceilings and through the interior above ground sleeves (wall and floor).
- All voids and or seams in insulation shall be filled with insulating cement and finished as specified herein.

- In the event staples are used, they shall be coated with vapor barrier mastic after insulation and taped. These staples shall not be visible on finished installation.

- Staples are not permitted on domestic hot water applications.

- End joints of each section of the installed pipe covering shall be tightly butted.

D2440 -EQUIPMENT

- Equipment shall be installed complete with all required hangers and supports in accordance with the manufacturer's recommendations.

- All equipment provided under this Section shall be installed in strict accordance with manufacturer's written installation instructions.

- Furnish and install all steel structural support members for proper hanging and support of equipment. Provide vibration isolation on all hangers.

- The Plumbing Contractor shall label all equipment. The contractor will provide the owner with excel spreadsheets of all items to be labeled, the owner will assign numbers, assign names, print out labels and provide the contractor with labels. The plumbing contractor will then affix the labels to the equipment. Brass tags are eliminated. As-builts and manuals will reference the owner provided numbers and names.

D2450 -COMMISSIONING

- Plumbing contractor and all other sub-contractors required for the work of this section shall provide all labor, materials and equipment required to assist with the building commissioning of this.

D30: HEATING, VENTILATING AND AIR CONDITIONING

D3010 -GENERAL REQUIREMENTS

- Examine all Drawings and all Sections of the Specifications for requirements therein affecting the work and this Section.

D3020 -SCOPE OF WORK

- The work under this Section shall include the furnishing of all materials, labor, equipment and supplies and the performance of all operations to provide complete working systems, in general, to include the following items:
    - Packaged Air Cooled Refrigeration Units
    - VRF Heat Pump System
    - Oil Fired Boilers

- Combustion Intake Air & Vent Piping
- Pumps
- Hydronic Piping
- Automatic Temperature Controls
- Hydronic Specialties
- BMS programming for integration within building management system.
- Piping sleeves
- Piping hangers/Supports
- Piping insulation
- Piping & fittings
- Hydronic Unit Heater
- Variable Refrigerant Flow (VRF) Heat Pump Systems
- Air Cooled Condensing Units
- Cooling Coils
- Fan Coil Units
- Equipment Roof Supports
- Refrigerant system Piping
- Condensate piping
- Condensate piping fittings, cleanouts and pumps.
- Hydronic valves
- Controls
- Exterior ductwork
- Exhaust Fans, including Inline Fans, Roof Fans and Upblast Fans.
- Sheet Metal Ductwork
- Duct fittings
- Access panels
- Exterior Refrigerant PVC Jacketing with UV protection

- Piping sleeves
- Piping hangers/Supports
- Piping insulation (Refrigerant and Hydronic)
- Vibration isolation
- Boiler system supply water feed, Autofill PRV and valves

- Provide any other component or related system (whether or not listed) which is part of the overall design and basic equipment and deemed necessary for its completion, thoroughness and readiness for operation in perfect condition.

- Furnish, set up and maintain all derricks, hoisting machinery, scaffolds, staging and planking as required for the work.

- Supply the service of an experienced and competent supervisor who shall be in charge of the HVAC contractor's work at the site.

- The HVAC contractor shall be held responsible for subletting any work shown or specified herein, but not classified as HVAC work in order to avoid any jurisdictional disputes and work stoppage arising therefrom.

- All electrical apparatus and controls furnished as a part of the HVAC work shall conform to applicable requirements under D50 - ELECTRICAL.

- All work shall be coordinated with the Construction Schedule.

D3030 -EXAMINATION OF SITE AND DOCUMENTS

- Bidders are expected to examine and to be thoroughly familiar with all contract documents and with the conditions under which work will be carried out. The Awarding Authority (Owner) will not be responsible for errors, omissions and/or charges for extra work arising from failure to familiarize themselves with the Contract Documents or existing conditions. By submitting a bid, the Bidder agrees and warrants that he has had the opportunity to examine the site and the

  Contract Documents, that he is familiar with the conditions and requirements of both and where they require, in any part of the work a given result to be produced, that the Contract Documents are adequate and that he will produce the required results.

- Pre-Bid Conference: Bidders are strongly encouraged to attend the Pre-Bid conference; refer to Advertisement for Bids for time and date.

D3040 -CODES, ORDINANCES, AND PERMITS

- Installation of systems and equipment provided under this section shall be done in strict accordance with Massachusetts Department of Public Safety Codes, Massachusetts Department of Environmental Protection, Massachu-

setts State Building and Mechanical Code, and Town of Leicester Regulations having jurisdiction.

- All pressure vessels shall conform to ASME and state codes and regulations.

- All work, where applicable, shall conform to NFPA codes and all material shall be
U.L. approved.

- All electrical apparatus furnished under this section shall be approved by the U.L. and shall be so labeled or listed where such is applicable. Where custom-built equipment is specified and the U.L. label or listing is not applicable to the completed product, all components used in the construction of such equipment shall be labeled or listed by U.L. where such is applicable to the component.

- Give notices, file plans, obtain permits and licenses, pay fees and obtain necessary approvals from authorities having jurisdiction. Deliver certificates of inspection to Engineer. No work shall be covered before examination and approval by Engineer, inspectors, and authorities having jurisdiction. Replace imperfect or condemned work conforming to requirements, satisfactory to Engineer, and without extra cost to the Owner. If work is covered before due inspection and approval, the installing contractors shall pay costs of uncovering and reinstalling the covering, whether it meets contract requirements or not.

D3050 -CLEANING

- During the progress of the heating, ventilating and air conditioning work, clean up and remove all oil, grease and other debris caused by this work. At completion, the Contractor shall clean all equipment, piping and duct systems and leave all work in perfect operating condition.

D3060 -RESPONSIBILITY

- The structure and its appurtenances, clearances and the related services, such as plumbing, heating, ventilation and electric service have been planned to be legal, adequate and suitable for the installation of equipment specified under this section. The Owner will not assume any increase in cost caused by differing requirements peculiar to a particular make or type of equipment, and any incidental cost shall be borne by the HVAC Contractor. He shall be responsible for the proper location of his required sleeves, chases, inserts, etc., and see that they are set in the forms before the concrete is poured. He shall be responsible for his work and equipment furnished and installed by him until the completion

  and final acceptance of this contract, and he shall replace any work which may be damaged, lost or stolen, without additional cost to the Owner.

D3070 -PROTECTION OF MATERIALS, WORK, AND GROUNDS

- Materials, fixtures and equipment shall be properly protected and all pipe and

duct openings shall be temporarily closed so as to prevent obstruction and damage.

- Protect and preserve all materials, supplies and equipment of every description and all work performed. Protect all existing equipment and property of any kind from damage during the operations. Damage shall be repaired or replaced promptly by the Contractor at his expense.

D3080 -DRAWINGS

- It is the intention of the Specifications and Drawings to call for finished work, tested and ready for operation. Any apparatus, appliance, material or work not shown on the Drawings, but mentioned in the Specifications or vice-versa, or any incidental accessories necessary to make the work complete in all respects and ready for operation, even if not particularly specified, shall be provided by the Contractor without additional expense to the Owner.

- The Drawings are generally diagrammatic. The locations of all items that are not definitely fixed by dimensions are approximate only. The exact locations must be determined at the project and shall have the approval of the Engineer before being installed. The Contractor shall follow Drawings, including his shop drawings, in laying out work and shall check the Drawings of other trades to verify spaces in which work will be installed. Maintain maximum headroom and space conditions. Where space conditions appear inadequate, notify the Engineer before proceeding with the installation. The Contractor shall, without extra charge, make reasonable modifications in the layout as needed to prevent conflict with work of other trades or for proper execution of the work.

- Size of pipes and methods of running them are shown, but it is not intended to show every offset and fitting, nor every structural difficulty that may be encountered. To carry out the true intent and purpose of the Drawings, all necessary parts to make complete approved working systems ready for use, shall be furnished without extra charge. All work shall be installed in such a manner as to avoid being unsightly.

- All measurements shall be taken at the building by the Contractor, prior to purchasing and installing the equipment and piping.

D3090 -SHOP DRAWINGS

- HVAC contractor shall provide a complete set of shop drawings as described below to the engineer for review and approval prior to purchasing any materials or equipment. Provide (5) sets of shop drawings for materials indicated below:
    - Packaged Air Cooled Refrigeration Units
    - Oil Fired Boilers
    - Combustion Intake Air & Vent Piping
    - Pumps

- Hydronic Piping
- Automatic Temperature Controls
- Hydronic Specialties
- Piping sleeves
- Piping hangers/Supports
- Piping insulation
- Piping & fittings
- Hydronic Unit Heater
- Controls Sequences
- Variable Refrigerant Flow (VRF) System(s).
- Air Cooled Condensing Units
- Cooling Coils
- VRF Fan Coil Units
- Equipment Roof Supports – Engineered System Drawings
- Refrigerant system Piping
- Condensate Piping
- Fan Coil Condensate Pump Kit
- Valves
- Sheet Metal Ductwork and Duct Fittings
- Controls
- Exterior Ductwork
- Access Panels
- Exterior Refrigerant PVC Jacketing with UV protection
- Piping Sleeves
- Piping Hangers/Supports
- Piping Insulation (Refrigerant and Hydronic)
- Vibration Isolation
- Chemical Shot Feeder

- Exhaust Fans
- Exhaust Fan Adapter Curbs
- Sensors, Pressure gauges and hydronic specialties.
- Automatic Temperature Controls components complete with wiring diagrams for complete point to point controls diagram indicating systems product components.
- Sequence of Controls

D3100 -OPERATING AND MAINTENANCE INSTRUCTIONS

- Submit operation and maintenance data complete with at least the following:
  - Table of Contents
  - Introduction:
    - Explanation of manual and its use
    - Description of all systems
  - Plant Operation:
    - Operating instructions for all HVAC apparatus.
  - Maintenance:
    - Maintenance and lubricating chart: Furnish three sets of charts indicating equipment tag number, location of equipment, equipment service, greasing and lubricating requirements, lubricants and intervals of lubrication.
    - Recommended list of spare parts: Furnish two typed sets of instructions for ordering spare parts with sectional views of the fittings or equipment showing parts numbered or labeled to facilitate ordering replacements, including a list with itemized prices of those parts recommended to be kept on hand as spares, as well as the name and address of where they may be obtained.
    - Valve Chart
  - Manufacturer's Literature:
    - Variable Refrigerant Flow System (Indoor and Outdoor System Components with proprietary controls documentation)
    - Automatic Temperature Controls
    - Sequence of Controls

- □ Boiler System Operation and Maintenance Manuals
- □ Pump Operation and Maintenance Manuals
- □ Air Cooled Condensing Unit Operation and Maintenance Manuals
- □ Chemical Shot feeder Operation and Maintenance Manuals
- □ Hydraulic Separator Operation and Maintenance Manuals
- □ Exhaust Fans

D3110 -UNDERWRITERS' LABEL AND LISTING

- All electrical apparatus furnished under this Section shall be approved by the UL and shall be labeled or listed where such is applicable. Where custom-built equipment is specified and the UL label or listing is not applicable to the completed product, all components used in the construction of such equipment shall be labeled or listed by UL where such is applicable to the component.

D3120 -CUTTING AND PATCHING

- All cutting, patching and painting associated with demolition work and necessary for the proper installation of work to be performed under this Section and subsections shall be provided by the HVAC Contractor.
- All work shall be fully coordinated with all phases of construction, in order to minimize the requirements for cutting and patching.
- The contractor shall see that all such chases, openings, and sleeves are located accurately and are of the proper size and shape and shall consult with the Engineer in reference to this work. In so doing, he shall confine the cutting to the smallest extent possible consistent with the work to be done. In no case shall piers or structural members be cut without the approval of the Engineer.
- Carefully fit around, close up, repair, patch, and point around the work specified herein to the entire satisfaction of the Owner and Engineer. Finished work appearance shall match or exceed existing conditions where cutting/patching has occurred for final approval by Owner and Engineer.
- Fill and patch all openings or holes left in the existing structures by the removal of existing equipment by himself, his contractors or other filed contractors.
- All of this work shall be carefully done by workmen competent to do such work and with the proper and smallest tools applicable.
- Any cost caused by defective or ill-timed work shall be the contractor's responsibility therefore. Engineer retains the right to deem patch work acceptable. Worked deemed unacceptable to the satisfaction of engineer and owner shall be re-finished to achieve acceptable appearance at the contractor's expense.

- The existing fire resistance rating of floors, walls, and ceilings shall be maintained. Firestopping media shall be installed in accordance with manufacturer's written instructions.

D3130 -GUARANTEE

- Guarantee that all work installed will be free from any and all defects in workmanship and/or materials and that all apparatus will develop capacities and characteristics specified.

- If, during a period of one year from the date of final completion and acceptance of the work, any such defects in workmanship, material or performance appear, the HVAC Contractor will, without cost to the Owner, remedy such defects within a reasonable time to be specified in notice from the Architect.

- Provide all refrigeration compressors with the manufacturer's extended replacement warranty for a total of five years. All warranties must have been submitted prior to Final Payment.

- Correct all damage to insulation, paint or building caused by defects in his work, equipment, and its operation. Guarantee shall include startup, shutdown, maintenance, and 24-hour service during the guarantee period.

- Any apparatus that requires excessive service during the warranty period will be considered defective and shall be replaced.

D3140 -ELECTRICAL

- All electrical apparatus and controls furnished as a part of this Section shall conform to applicable requirements under D50 - ELECTRICAL.

- All motors furnished under this Section shall be furnished by the manufacturer of the equipment served and shall be mounted and aligned so as to run free and true. Each motor shall be built to conform to the latest applicable NEMA, ANSI and IEEE standards for the type and duty of service it is to perform.

- Each motor shall be designed to operate on 60 Hz, and each shall be expressly wound for the voltage specified. Each motor shall operate satisfactorily at rated load and frequency with a voltage variation no greater than plus or minus 10 percent of voltage specified. Dual voltage 208/220 motors will not be accepted.

- All motors shall be provided with adequate starting and protective equipment and each shall have a terminal box of adequate size to accommodate the required conduit and wires.

- Motor controllers shall be equipped with all poles, auxiliary contacts and other devices necessary to permit the interlocking and control sequences required. Controller operating coils shall be generally designed for 120 volt operation, and 3 phase motors shall be provided with thermal overload protection in all phases.

- Furnish all magnetic starters for each and every motor furnished under this section of the specification, except where otherwise indicated. The Electrical Contractor shall install and wire the starter. The Contractor shall provide disconnects for all HVAC equipment. The Electric Contractor shall install and wire all disconnects. All starters for motors over 10 HP shall be solid state with reduced inrush design. The maximum allowable inrush shall be 2.5 times running load amperage. All starters for fractional HP motors shall be provided with manufacturer's standard motor starter.
- Furnish and install all low voltage and/or line voltage control wiring for the boiler/burner units, rooftop units, heat recovery unit, pumps, fans, and all equipment provided in this section. All wiring shall be performed by a licensed electrician.

D3150 -VERIFYING CONDITIONS

- Before commencing any work under this section, verify all governing dimensions and examine all adjoining work on which this work is in any way associated or connected. Failure to visit the jobsite will in no way relieve the Contractor from installing the work according to the intent of these specifications and at no additional cost to the Owner.
- Each bidder shall visit the site and inspect conditions affecting the proposed work. Failure to do so and misinterpretation of the Plans and Specifications resulting therefrom shall be entirely the responsibility of the bidder.
- Each bidder shall make note of the existing conditions affecting hauling, rigging, transportation, installation, etc., in connection with his work and shall make all provisions for transportation of all materials and equipment.
- Where field conditions require, the Contractor shall arrange for equipment to be shipped to the job, dismantled and assembled in place.
- Remove walls, window assemblies/glass and floor structures where necessary to install and remove equipment as shown. The Contractor shall reinstall such displaced structures to their original condition.

D3160 -PAINTING

- See requirements outlined within C30 – Interior Finishes.

D3170 -STANDARDS

- The latest published issue of the standards, recommendations, or requirements of the following listed societies, associations, or institutes in effect at the date of Contract are part of this Specification. These shall be considered as minimum requirements; specific requirements of this specification and/or associated drawings shall have precedence. In case of conflict between published requirements, the Owner's representative shall determine which is to be followed.

- AMCA — Air Moving and Conditioning Association
- ANSI — American National Standards Institute
- ASHRAE — American Society for Heating, Refrigerating, and Air Conditioning Engineers
- ASME — American Society of Mechanical Engineers
- ASTM — American Society for Testing and Materials
- FIA — Factory Insurance Association
- IEEE — Institute of Electrical and Electronic Engineers
- MCAA — Mechanical Contractors Association of America
- NEMA — National Electrical Manufacturers Association
- NFPA — National Fire Protection Association
- SMACNA — Sheet Metal and Air Conditioning Contractors' National Association
- UL — Underwriters' Laboratories, Inc.
- OSHA — Occupational Safety and Health Act
- NEC — National Electric Code

D3180 -COOPERATION AND COORDINATION WITH OTHER TRADES

- The work shall be so performed that the progress of the entire building construction including all other trades, shall not be delayed nor interfered with. Materials and apparatus shall be installed as fast as conditions of the building will permit and must be installed promptly when and as desired.

- Confer with all other trades relative to location of all apparatus and equipment to be installed and select locations so as not to conflict with work of other Sections. Any conflicts shall be referred immediately to the Architect for decision to prevent delay in installation of work. All work and materials placed in violation of this clause shall be readjusted to the Architect's satisfaction, at no expense to the Owner.

- Where work of this section will be installed in close proximity to work of other sections or where there is evidence that the work of this section will interfere with work of other sections, assist in working out space conditions to make satisfactory adjustment. Prepare and submit for approval 3/8-inch scale or larger working drawings and sections, clearly showing how this work is to be installed in relation to the work of other sections. If the work of this section is installed before coordinating with other trades or so as to cause interference with work of other trades, make changes necessary to protect conditions without extra charge.

- Keep fully informed as to the shape, size and position of all openings required for all apparatus and give information in advance to build openings into the work. Furnish and set in place all sleeves, pockets, supports and incidentals.

- All distribution systems which require pitch or slope such as storm and sanitary drains and water piping shall have the right of way over those which do not. Confer with other trades as to the location of pipes, lights and apparatus and install work to avoid interferences.

- This contractor shall, with the approval of the Architect and without extra charge, make reasonable modifications in his work as required by normal structural interferences, or by interference with work of other trades, or for proper execution of the work.

- This contractor shall protect all materials and work of other trades from damage that may be caused by his work and shall make good any damages so caused.

D3190 -SEISMIC RESTRAINT REQUIREMENTS

- For each seismic restraint, provide certified calculations to verify adequacy to meet the following design requirements:

  - Ability to accommodate relative seismic displacements of supported item between points of support.

  - Ability to accommodate the required seismic forces.

- For each respective set of anchor bolts provide calculations to verify adequacy to meet combined seismic-induced sheer and tension forces.

- For each weldment between structure and item subject to seismic force, provide calculations to verify adequacy.

- Calculations shall be stamped by a professional engineer who is registered in the State of Massachusetts and has specific experience in seismic calculations.

- Restraints shall maintain the restrained item in a captive position without short circuiting the vibration isolation.

- Provide seismic restraints for all piping, ductwork and equipment in accordance with the requirements of the International Building Code and NFPA.

D3200 -OWNER TRAINING

- Prior to Final Inspection and Acceptance; the contractor shall provide one (1) three-hour training session to provide the Owner Representative and their facilities personnel (if requested) with system training and preventative maintenance overview for all new HVAC system installations that are within project scope. Provide training for new Building Management System including initial dashboard and login configurations as required for owner programming and

scheduling adjustments.

- Owner Training shall be performed after completed and approved Owner Maintenance manuals have been provided to Owner's Representative.

D3210 -FINAL ACCEPTANCE

- Final acceptance of Ownership of the HVAC system installed within this scope of work shall be contingent on passing a satisfactory system pressure test, mechanical performance test and cooling and heating function test to determine that the system will perform according to the contract requirements. The above tests shall be witnessed by the Engineer and the Owner at his option and acceptance will only be granted in writing by the Owner after receipt of certification from the Engineer that the design criteria have been met.

- The work shall be so performed that the progress of the entire building construction, including all other trades, shall not be delayed or interfered with. Materials and apparatus shall be installed as fast as conditions permit and must be installed promptly when and as desired.

- Confer with all other trades relative to location of all apparatus and equipment to be installed and select locations so as not to conflict with work of other Sections.

  Any conflicts shall be referred immediately to the Engineer for decision to prevent delay in installation of work. All work and materials placed in violation of this clause shall be readjusted to the Engineer's satisfaction, at no expense to the Owner.

- Where work of this section will be installed in close proximity to work of other sections or where there is evidence that the work of this section will interfere with work of other sections, assist in working out space conditions to make satisfactory adjustment. If so directed, prepare and submit for approval 3/8-inch scale or larger working drawings and sections, clearly showing how this work is to be installed in relation to the work of other sections. If the work of this section is installed before coordinating with other trades or so as to cause interference with work of other trades, make changes necessary to protect conditions without extra charge.

D3220 -SEQUENCING

- Coordinate work of this Filed Subcontract with that of other trades, affecting or affected by this work, and cooperate with the other trades as is necessary to assure the steady progress of work.

- Do not order or deliver any materials until all submittals, required in the listed Specification Sections included as part of this Filed Subcontract, have been received and approved by the Architect.

- Before proceeding with installation work, inspect all project conditions and all work of other trades to assure that all such conditions and work are suitable to satisfactorily receive the work of this Section and notify the Architect in writing

of any which are not. Do not proceed further until corrective work has been completed or waived.

D3230 -PACKEGED AIR COOLED REFRIGERATION UNITS

- Basis-of-Design Product: Subject to compliance with requirements, provide product indicated on Drawings or comparable product by one of the following:
  - Daikin
  - Munters
  - Valent
  - Trane
  - Johnson Controls
  - Or approved equal
- Unit Construction:
  - Base: Manufacturer's standard base shall be constructed of minimum 10 gage galvanized steel with 16 gage integral floor pan. Floor pan shall be insulated with minimum 1/4" closed cell neoprene liner. All floor seams shall have a raised rib joint. Penetrations through the floor shall have a minimum

    3/8" raised rib around each opening. Base shall have a minimum 4" overhang over the top of a roof curb to prevent water infiltration.
  - Panels: Manufacturer's standard casing shall be constructed of minimum 2- inch, foam-injected, double-wall panels.
    - Individual panels shall be constructed so that there is no metal-to-metal contact between the interior and exterior sheet metal of each panel.
    - Interior side of panel shall be 22 gage G-90 galvanized steel. Exterior side of panel shall be 22 gage pre-painted steel rated for 1000 hours of salt spray exposure in accordance with ASTM B117 and ASTM D1654.
    - Insulation shall be 2 lb/ft3 injected foam insulation with a minimum R-value of 12. Foam sheet or fiberglass insulation are not acceptable due to reduced durability of panel and increased chance for rust forming between the panels. Insulation water absorption must be no more than
      0.038 lb/ft per ASTM D2842 and show "no growth" per ASTM G21 bi-ocide testing. Interior sheet metal shall encase insulation so that it is not exposed to the airstream.
  - Access doors shall be provided for access to all internal components re-quiring regular maintenance or inspection. Access door construction and

materials shall be identical to unit casing. Access doors shall have galvanized hinges and a minimum of two quarter-turn compression latches with adjustable catches. Access doors shall be sealed with a full-perimeter D-shaped gasket constructed of EPDM sponge rubber.

- Roof shall be pitched away from access doors and include a minimum ½" overhang around the perimeter of the unit.

- Outdoor Air Inlet: Outdoor units shall be provided with a factory provided, field-assembled weather hood with aluminum washable filters on the outdoor air inlet. Indoor units shall be provided with duct connections at the outdoor air inlet.

- Unit return shall be horizontal front without the need for a plenum curb.

  - If a plenum curb is provided, a full perimeter OSHA compliant catwalk shall be provided in order to access unit components without the need for a ladder or scaffolding.

- Unit discharge shall be horizontal flow without the need for a plenum curb.

  - If a plenum curb is provided, a full perimeter OSHA compliant catwalk shall be provided in order to access unit components without the need for a ladder or scaffolding.

- Unit shall include lifting eyes on top of unit for use during rigging.

- Motorized dampers – Outside Air and Return Air

  - Frame shall be constructed of a 16 gage galvanized steel hat-channel.
  - Blades shall be constructed of 16 gage galvanized steel strengthened by three longitudinal 1 inch deep "vee" grooves.
  - Blades shall be symmetrical relative to its axle pivot point.
  - Axle bearings shall be synthetic sleeve-type and rotate inside extruded holes in the damper frame.
  - Blade seals shall be extruded vinyl permanently bonded to the appropriate blade edges.
  - Frame shall include flexible stainless steel compression-type jamb seals.
  - Modulating spring-return actuators shall be provided by the factory, installed on the damper, and wired to the control center. Each damper shall have a dedicated actuator. Single actuators with gear trains are not acceptable.
  - Damper leakage shall be no more than 3 cfm/sq.ft. at 1 in.wg static pressure.

- Exhaust: Gravity backdraft damper with internal bird screen. Indoor units shall have duct flanges for connection to exhaust ductwork.

- Heat Recovery Device: Heat Wheel – Polymer substrate with silica gel desiccant.
    - Energy recovery shall be an integral part of unit from the manufacturer. No field assembly, ducting, or wiring shall be required with the energy recovery option.
    - Energy recovery media shall be accessible through a 2" thick, foam-injected, double-wall, hinged access door with quarter-turn latches.
    - Energy recovery shall be provided through a total enthalpy wheel providing sensible and latent energy transfer per the scheduled performance.
    - Energy recovery wheel shall be constructed of lightweight polymer substrate with permanently-bonded silica gel desiccant.
    - Energy recovery wheel cassette shall be mounted perpendicular (90°) to the base of the unit.
    - A VFD shall be required to modulate the speed of the wheel and to provide soft start to extend the life of the belt.
    - Individual pie-shaped wheel sections shall be removable from wheel cassette for maintenance.
    - Wheel bearings shall be selected to provide an L-10 life in excess of 400,000 hours.
    - Rim shall be continuous rolled stainless steel and the wheel shall be connected to the shaft by means of taper locks.
    - Energy wheel cassette shall include seals, drive motor, and urethane drive belt.
    - Latent energy shall be transferred entirely in the vapor phase with no condensation.
    - The energy recovery cassette and wheel drive motor shall be an Underwriters Laboratories Recognized Component for electrical and fire safety.
    - Thermal performance shall be certified by the wheel manufacturer in accordance with ASHRAE Standard 84, Method of Testing Air-to-Air Heat Exchangers and AHRI Standard 1060, Rating Air-to-Air Energy Recovery Ventilation Equipment.
- DX Cooling Coil:
    - Coil shall be rated in accordance to AHRI standards, designed to withstand 250 psig working pressure at 300 degrees F, and pressure tested to 600 psig.
    - Refrigeration systems with more than one circuit shall have interlaced evaporator coils.

- Coil casing shall be constructed of 16 gage galvanized steel
- Coil tubes shall be constructed of 1/2" diameter, 0.016" thick seamless copper tubing.
- Coil fins shall be constructed of 0.0060" thick aluminum.
- Drain pan
  - Drain pan shall be constructed of a minimum of 18 gage 201 stainless steel.
  - Drain pan shall be double-sloped to ensure condensate removal from unit.
  - Drain pan shall extend a minimum of 8” past the evaporator coil to ensure condensate retention.
- Refrigeration – Air Cooled DX:
  - Unit shall be provided with factory piped, charged, and tested packaged air-cooled direct expansion refrigeration system.
  - Refrigeration systems Digital capacity control, each stage on an independent refrigerant circuit.
  - Refrigeration system shall be provided with thermal expansion valve (TXV) incorporating adjustable superheat.

- Compressors:
  - Compressors shall be hermetic scroll type and include the following items:
    - Suction and discharge isolation valves.
    - Reverse rotation protection.
    - Oil level adjustment.
    - Oil filter.
    - Filter drier
    - Short cycling control.
    - High and low pressure limits.
    - Crankcase heaters.
  - Compressors shall be installed in a separate compartment, above the unit floor, and isolated from the surrounding environment by double wall foam injected panels and access doors.

- Compressors shall be installed using manufacturer's recommended rubber vibration isolators.
- Capacity control shall be provided through the use of a single Digital Scroll™ compressor. Additional compressors, if required, shall be fixed stage scroll compressors.

- Hot Gas Reheat:
  - Hot-gas reheat coil shall be separated from the evaporator coil by a minimum of 6" in the direction of airflow to prevent the re-evaporation of condensate, provide room for coil cleaning, and allow control system to monitor evaporator coil leaving dew point temperature.
  - Coil shall be rated in accordance to AHRI standards, designed to withstand 250 psig working pressure at 300 degrees F, and pressure tested to 600 psig.
  - Coil casing shall be constructed of 16 gage galvanized steel
  - Coil tubes shall be constructed of 5/16" diameter, 0.012" thick seamless copper tubing.
  - Coil fins shall be constructed of 0.0060" thick aluminum fins.
  - Hot-gas reheat shall be controlled through a factory-supplied and controlled modulating 3-way valve.
- Air Cooled Condenser:
- Air cooled condenser coil shall be unit mounted.
  - Provide condenser coils with galvanized casing, seamless copper tubes, and aluminum fins.
  - Coil shall be rated in accordance to AHRI standards, designed to withstand 250 psig working pressure at 300 degrees F, and pressure tested to 600 psig.
  - Coil casing shall be constructed of 16 gage galvanized steel
  - Coil tubes shall be constructed of 5/16" diameter, 0.012" thick seamless copper tubing.
  - Coil fins shall be constructed of 0.0060" thick aluminum fins.
  - Condenser coils shall be mounted at a minimum 30 degree angle from vertical to help prevent hail damage.
- Condensing Fans – Low ambient and Low sound:
  - Condensing section shall be equipped with high-performance 1200 rpm condensing fans.

- Condensing fan blades shall be constructed out of a polymer, sickle-shaped blades with serrated trailing edges for sound reduction. Individual fans shall be capable of an Lw(A) of 75 dB as tested to ISO 5801.
- Condensing fan motor shall be electrically-commutated and capable of modulation without the need of an external variable frequency drive.
- All condensing fans shall modulate in unison to maintain the head pressure set point.

- Direct Drive Supply and Exhaust Airflow Blowers:
  - Fan assemblies shall be direct-drive without the use of belts or adjustable sheaves.
  - A variable frequency drive (VFD) shall be provided for each fan section. VFD shall be mounted, wired, and programmed by the equipment manufacturer. VFD shall be located in an enclosed compartment outside of the supply or exhaust air stream.
  - Fan wheels shall be constructed of corrosion-resistant, fiber-reinforced polyamide with backward curved blades.
  - Fan wheel shall be tested in accordance to AMCA 210. Fan speed shall not exceed 2400 RPM.
  - Fans may be full width or partial width. Fans modified to partial width through the use of banding or other blade reduction method are not acceptable.
  - Fans shall be mounted on minimum 1” tall neoprene isolators.
  - Fan motor shall be VFD rated, ODP type, EPACT compliant, and shall be of premium efficiency (PE).

- Hydronic Heating Coil:
  - Unit shall be provided with AHRI rated hot water coil.
    - Coil casing shall be constructed of 16 gage galvanized steel casing.
    - Coil tubes shall be constructed of 1/2" diameter, 0.016" thick seamless copper tubing.
    - Coil shall be rated in accordance to AHRI standards, designed to withstand 250 psig working pressure at 300 degrees F, and pressure tested to 450 psig.
    - Coil fins shall be constructed of 0.0060" thick aluminum fins.
  - Unit shall include an insulated vestibule for piping hot water connections inside the unit.
  - Piping shall be provided by others in the field.

- Control valve shall be provided by others in the field.
- Unit controller shall provide a 0-10 VDC signal to operate field-provided control valve.

- Filters:
  - Outdoor air intake hood filters
    - Filter rack shall accommodate 1" media.
    - Manufacturer shall provide 1 set of 1" aluminum filter media.
    - Filter sections shall be accessible from outside the unit and located in the outdoor air intake hood.
    - Filter sections shall be accessible through a 2" thick, foam-injected, double-wall, hinged access door with quarter-turn latches.
  - Supply air filters
    - Supply air filter rack shall accommodate factory-provided 2" MERV 8 & 4" MERV 13 filters.
    - Filter sections shall be accessible through a 2" thick, foam-injected, double-wall, hinged access door with quarter-turn latches.
    - Filter section shall include dirty filter pressure switch.

- Electrical:
  - Unit shall be constructed with an integral electrical and control center isolated from supply airflow, exhaust airflow, compressors, and heating elements. The control center shall control all aspects of the unit operation. VFDs with overload protection shall be provided for each fan bank.
  - Units shall be wired according to NEC and listed per ETL. ETL listing shall cover all components of the ventilator and not be limited to the control panel. All major electrical components shall be UL or ETL listed.
  - Unit shall have a single point of connection with integral unit mounted disconnect. Panel shall have an SCCR rating of 5kV.
  - Units shall be factory wired with a single point power connection.
  - Unit shall be provided with phase and brown out protection which shuts down all motors in the unit if the electrical phases are more than 7% out of balance on voltage, the voltage is more than 7% under design voltage, or on phase reversal.
  - The following items shall be provided and wired within the control center by the factory:

- Non-fused disconnect.
- Sub-circuit fusing.
- Low voltage transformers.
- Controls as specified in this section.
- Control circuit fusing.
- Terminal block.
- Supply and Exhaust Fan motor Variable Frequency Drives (VFDs).

- Electrical panel must house all high voltage components such as terminal blocks, variable frequency drives, and fuse blocks.
- All electrical power and controls wiring shall run in chase located between unit ceiling and roof to minimize interior wall penetrations and allow for ease of access.
- Options
  - Control panel shall include a factory supplied and mounted 115V GFCI convenience outlet receptacle with a 12A circuit breaker. Outlet shall be powered by the main power.
  - Unit shall include a factory supplied, mounted, and wired electric heating element in the control panel to maintain a minimum of 0F in the panel.

- Controls:
  - Units shall include factory supplied, mounted, wired, and tested stand-alone microprocessor controls.
  - Microprocessor controller shall be factory-programmed for discharge air control and use an internal 7-day time clock.
  - Microprocessor controller shall include local liquid crystal display (LCD) for user interface. Microprocessor controller remote LCD shall be mounted in a weather-proof enclosure and accessible without exposing the operator to high voltage wiring or having to turn off or circumvent the main disconnect.
  - The following sensors shall be factory supplied, mounted, and wired inside the unit:
    - Outdoor air humidity sensor.
    - Outdoor air temperature sensor.
    - Evaporator coil leaving air temperature sensor.

- Supply air filter pressure monitoring switch.

- The following devices shall be factory-supplied for field installation and wiring:
  - Supply air temp temperature sensor.
  - Wall-mounted room air temperature sensor.
  - Wall-mounted room air humidity sensor.
  - Wall-mounted or Return Air mounted CO2 sensor.
  - Space static pressure sensor.
  - Supply duct static pressure sensor.
  - Smoke detectors.
- Microprocessor controller shall include BACnet IP or BACnet MSTP communications for building management system interface.
- Microprocessor controller shall include a Web UI interface for remote web-based access of all unit digital and analog inputs and outputs. Web UI shall include unit scheduling, point trending capabilities, and an alarm history.

- Roof Curb: Refer to Section B - Shell for roof curbs and equipment supports.
  - Roof Curb: 18 gage galvanized steel with perimeter gasket and factory- installed 2” x 2” wood nailer; Insulated with 1” foil faced rigid board insulation. Curb height shall be 12 or 14 or 16 or 18 or 24 inches. Roof curb shall ship fully assembled.

D3240 -VARIABLE REFRIGERANT FLOW HEAT PUMP SYSTEM

- This section includes the design, performance, refrigerant details, controls and installation requirements for Daikin VRV systems (Variable Refrigerant Volume) distributed by DXS New England (978-977-9911).
- All units shall be listed and rated by ANSI/AHRI Standard 1230-2010 and meet all minimum IEER performance requirements as scheduled.
- The units shall be ANSI/UL STD 1995 listed and listed by Electrical Testing Labs (ETL) and bear the cETL label.
- All wiring shall be in accordance with the National Electric Code (NEC).
- The system will be produced in an ISO 9001 and ISO 14001 facility, which are standards set by the International Standard Organization (ISO). The system shall be factory tested for safety and function.
- The system and the design shall be in compliance with ASHRAE 15 Mechanical Refrigerant Code.

- Acceptable manufacturer :
  - Daikin, distributed by DXS New England.
  - Mitsubishi
  - LG
  - Or Approved Equal
- Submittals for Daikin products not provided by DXS New England will not be considered.
- Alternate manufacturers shall send approval requests to consultant 14 days prior to bid day, and include all information relevant to the alternate VRF system, including but not limited to: unit selections, refrigerant piping layout, refrigerant charge with ASHRAE 15 analysis, branch selector box layout and locations, heating and cooling capacities at design temperatures and including capacity losses from piping lengths, defrost cycles, and combination ratios, dimensional and weight differences, and any other aspect of the system that differs from the system specified.
- System Description
  - VRF system shall automatically vary the target evaporating and condensing temperatures based on building load and weather conditions to increase part load efficiency (Variable Refrigerant Temperature). The condensing unit shall also feature customizable operating modes which allows for the manual setting of target evaporating and condensing temperatures.
  - Heat Recovery
  - System shall permit simultaneous heating and cooling of each indoor unit. Multiple indoor units connected to a single branch selector port shall operate in the same mode (heating or cooling), similar to a two pipe heat pump

    system. Refer to the controls section of this specification for any central controller and/or mode switchover sequence that may be required.
- Start-up and Warranty
  - Installing contractor must be certified by VRF manufacturer. The bidders shall be required to submit training certification proof with bid documents and submittal documents. Untrained contractors who wish to bid this project may contact DXS New England (978-977-9911) to arrange training prior to bid day.
  - The manufacturer shall provide a factory trained service technician to start-up each unit. Manufacturer shall provide instruction to the owners' personnel on proper unit operation and maintenance.
  - The warranty period on all parts and compressors shall commence on the date of initial start-up and shall continue for a perio

- d of Ten (10) years not to exceed one hundred and twenty six (126) months from date of shipment. Proper maintenance of the equipment shall be conducted by certified technicians as per the manufacturer or manufacturer's representative requirements. Maintenance logs shall be supplied by the owner upon request.

- All manufacturer warranty shall be for parts only. All diagnosis and labour warranty shall be carried out by installing contractor as per the warranty requirements of this project.

- Refrigerant Piping

  - Refer and comply to the refrigerant piping specifications, including the special considerations for VRF refrigerant piping section.

  - Standard T style joints are not acceptable for a variable refrigerant volume system. Manufacturer specific Y joints shall be supplied by the VRF manufacturer.

- Fan Coils

  - Fan coils shall monitor and maintain the unit superheat (cooling mode) or subcooling (heating mode) using a computerized PID control. Internal unit components shall be factory wired and piped, and complete with electronic proportional expansion valve, flare connections, condensate drain pan, self- diagnostics, and auto-restart function.

- FXAQ – Wall Mounted Unit

  - Daikin indoor unit FXAQ shall be a wall mounted fan coil unit for installation onto a wall within a conditioned space. A mildew-proof, polystyrene condensate drain pan and resin net mold resistant filter shall be included as standard equipment.

  - The indoor unit's sound pressure shall range from 31 dB(A) to 41 dB(A) at low speed measured at 3.3 feet below and 3.3 feet away from the unit.

  - The unit shall have an auto-swing louver which ensures efficient air distribution, which closes automatically when the unit stops. The remote controller shall be able to set five (5) steps of discharge angle. The front grille shall be easily removed for washing.

  - The cabinet shall be affixed to a factory supplied wall mounting template and located in the conditioned space.

  - The cabinet shall be constructed with sound absorbing foamed polystyrene and polyethylene insulation.

  - The fan type shall be direct-drive cross-flow with statically and dynamically balanced impeller with high and low fan speeds available.

  - Units shall be provided with a loose field installed condensate pump.

- FXSQ – 10" Concealed Ceiling Ducted Unit
    - Daikin indoor unit FXSQ shall be a built-in ceiling concealed fan coil unit with variable speed direct drive DC type fan and auto CFM adjustment at commissioning. Casing shall be constructed of galvanized steel. Configuration shall be horizontal discharge air with horizontal return air, with a maximum height of 9-5/8'' and be designed to fit in tight ceiling plenums.
    - The indoor unit's sound pressure shall range from 28 dB(A) to 36 dB(A) at low speed measured 5 feet below the ducted unit.
    - The indoor units shall be equipped with a condensate pan and condensate pump. The condensate pump shall provide up to 25" of lift from the center of the drain outlet and have a built-in safety shutoff and alarm.
    - The fan shall have a variable speed direct drive DC motor with statically and dynamically balanced impeller with 3 user-selectable fan speeds. The automatic fan speed mode shall allow the fan to vary between 5 speeds based on space load. The unit shall have logic for automatically adjusting external static pressure settings of the fan motor (selectable during commissioning).
    - The unit shall ship from the factory in a rear return configuration and shall be field convertible to a bottom return configuration.
    - Field installed MERV8 filters and filter kits with 2" or 4" filter depths.
- Condensing Unit
    - The condensing unit shall be factory assembled in North America and prewired with all necessary electronic and refrigerant controls. The refrigeration circuit of the condensing unit shall consist of Daikin inverter scroll compressors, motors, fans, heat exchanger, electronic expansion valves, solenoid valves, 4-way valve, distribution headers, capillaries, filters, shut off valves, oil separators, service ports, liquid receiver (heat recovery only) and suction accumulator.
    - The system will automatically restart operation after a power failure and will not cause any settings to be lost.
    - The unit shall incorporate an auto-charging feature to ensure proper refrigerant charge.
    - The following safety devices shall be included on the condensing unit: high pressure sensor and switch, low pressure sensor, control circuit fuses, crankcase heaters, fusible plug, overload relay, inverter overload protector, thermal protectors for compressor and fan motors, over current protection for the inverter, and anti-recycling timers.
    - The Daikin inverter scroll compressors shall be high efficiency reluctance DC (digitally commutating), hermetically sealed, variable speed type. Temperatures and pressures shall be read every 20 seconds and calculated. With each reading, the compressor capacity (INV frequency) shall be controlled to eliminate deviation from target value. Non inverter-driven com-

pressors shall not be accepted.

- Neodymium magnets shall be adopted in the rotor construction to yield a higher torque and efficiency in the compressor instead of the normal ferrite magnet type. Upon complete stop of the compressor, the neodymium magnets will position the rotor into the optimum position for a low torque start.

- The compressors' motors shall have a cooling system using discharge gas, to avoid sudden changes in temperature resulting in significant stresses on winding and bearings.

- Inverter board shall be refrigerant-cooled to prevent inefficient and unstable operation that can result from air-cooled inverter boards due to varying ambient conditions.

- The compressor shall be internally isolated to avoid the transmission of vibration.

- In the case of multiple condenser modules, operation hours of the compressors shall be balanced by means of the Duty Cycling Function.

- Air Cooled

- The fan motor shall have inherent protection and permanently lubricated bearings. The motor shall be provided with a fan guard to prevent contact with moving parts. The condensing unit shall consist of one or more propeller type, direct-drive 350 or 750 W fan motors that have multiple speed operation via a DC (digitally commutating) inverter. Motors shall be capable of delivering design air at high external static pressures up to 0.32 in WG (factory set as standard at 0.12 in. WG) to accommodate field applied condensing unit discharge ductwork..

- Night setback control for low noise operation shall automatically limit the maximum speed of the fan motor.

- The heat exchanger on the condensing units shall be manufactured from Hi- X seamless copper tubes with N-shape internal grooves mechanically bonded on to aluminum fins to an e-Pass Design. The heat exchanger coil shall be of a waffle louver fin and rifled bore tube design to ensure high efficiency performance.
- The fins are to be covered with an anti-corrosion hydrophilic blue coating as standard with a salt spray test rating of 1000hr (ASTM B117 & Blister Rating:10), Acetic acid salt spray test of 500hr (ASTM G85 & Blister Rating:10).

- Cold Climate Series

  - Condensing units shall be specifically designed and built for cold climate applications, where the VRF system will be the primary or sole source of heating. Condensing units shall have heating capacity and efficiency data down to -22F.

  - Unit shall be capable of providing up to 100% of nominal capacity in

heating at 0F, up to 85% at -13F, and up to 60% at -22F. Manufacturers not meeting these minimum capacities and temperatures, or manufacturers without operational data down to -22F shall include separate supplemental heat.

- Condensing units shall exclusively use inverter compressors designed for cold climate, including vapour-injection technology.

- The outdoor coil shall have a three-circuit heat exchanger design. The lower part of the coil shall be a hot gas base pan circuit to prevent ice buildup in the drain pan, allowing installation without additional drain pan heaters. Manufacturers without hot gas base pan circuits shall provide a drain pan heater accessory, installed and wired by contractor.

- RELQ – Heat Recovery VRV-IV AURORA (Cold Climate)
  - The outdoor unit shall be capable of heating operation down to -22°F ambient temperature. Tested factory data on heating capacity and efficiency shall be available. Continuous heating shall be provided during defrost mode for multi-module systems.
  - The outdoor unit shall be capable of cooling operation down to +23°F without any additional low ambient controls.
  - The system shall have a factory standard technical cooling option to allow simultaneous heating and cooling down to -4°F. Manufacturers that cannot guarantee simultaneous heating and cooling down to -4°F, even when the system is cooling-dominant, shall provide separate systems for zones requiring year-round cooling.
- Branch Selector Box
  - Selector box cabinets shall have a galvanized steel plate casing and shall house multiple electronic expansion valves and a sub-cooling loop. The unit shall contain sound absorption thermal insulating material made of flame and heat resistant foamed polyethylene.
  - Branch selector boxes shall not require drain pan and drain connections. Manufacturers with branch selector boxes requiring secondary drain pans and drain connections shall coordinate with the installing contractor at no extra cost to the owner.
  - Manufacturers with branch selector box sizes, arrangements, or locations that differ from what is specified shall make the necessary arrangements to ensure their alternative branch selector boxes both fit in the space and that ASHRAE 15 compliance is still met.
  - Manufacturers shall provide sound data for all branch selector boxes. If sound data is unavailable or exceeds the values below, or if branch boxes make use of solenoid valves instead of electronic expansion valves, necessary precautions shall be taken. Precautions shall include the supply and install of sound blankets, or the relocation of branch boxes away from the occupied spaces, or extra insulation to the ceilings and walls around

the branch selector boxes, all at no extra cost to the owner.

	Voltage	MCA	Operating Sound	Max Sound	WxHxD	Weight
		A	dB(A)	dB(A)	inch	lbs
BSQ36TVJ	230V 1ph	0.1	35	40	15.3x8.1x12.8	27
BSQ60TVJ	230V 1ph	0.1	41	45	15.3x8.1x12.8	27
BSQ96TVJ	230V 1ph	0.1	41	45	15.3x8.1x12.8	33
BS4Q54TVJ	230V 1ph	0.4	38	45	14.6x11.7x18.9	49
BS6Q54TVJ	230V 1ph	0.6	39	47	22.8x11.7x18.9	68
BS8Q54TVJ	230V 1ph	0.8	39	47	22.8x11.7x18.9	73
BS10Q54TVJ	230V 1ph	1.0	40	48	32.3x11.7x18.9	101
BS12Q54TVJ	230V 1ph	1.2	40	48	32.3x11.7x18.9	106

- Local Controls
  - Fan coil units shall be supplied with individual zone controllers, similar to Daikin model BRC1E73
  - Zone controllers shall be hard wired by installing contractor.
  - Controllers shall be able to function as follows:
    - The controller shall have single and dual setpoints for occupied periods, and independent setback setpoints for unoccupied periods.
    - The controller shall have the ability to digitally prohibit individual buttons and functions, including custom mode selection.
    - The controller shall have a self diagnosis function that constantly monitors the system for malfunctions.
    - The controller shall be equipped with a thermostat sensor.
    - Controller shall have built-in 7 day, weekday plus Saturday Sunday (5+1+1), weekday plus weekend (5+2) and everyday (1) scheduler.
- Central Controls
  - Provide an advanced multi-zone controller for installation in a common ar-

ea as shown on the plans, equal to Daikin iTouch Manager. The controller shall have a 10" LCD touch screen display with the following screen views and functionalities :

- Central control of set points, schedules, fan speeds, heat/cool mode, and of setback (override) temperature settings during unoccupied periods.
- Adjustable temperature limits to restrict local wall mounted thermostat set-point ranges.
- Visible and audible alarm indication of any system malfunctions with error code.
- Tiered hierarchy allowing for control of fan coil units independently or as a group.
- Remotely disable individual functions of the wall mounted zone controllers.
- Web enabled for remote access from PC, tablet or portable device and automatic alert and error emails.
- The following two automatic changeover methods shall be available. One shall be selected upon commissioning.
    - Averaging Method – the central controller shall sum up the difference between room temperatures and set points for all indoor units in the system. Once this delta reaches the primary changeover deadband of ± 2°F (adjustable), the central controller shall change over the system automatically.
    - Voting Method – The central controller shall evaluate the difference between individual room temperatures and set points, and only include a fan coil in the algorithm if the difference has passed the primary dead band for more than the guard timer, or past the secondary dead band. Heating priority option shall be available.
- For both automatic changeover options, a weight (0-3) can be added to each indoor unit. The automatic changeover algorithm shall use this weighting to prioritize changeover for the more heavily weighted fan coils.
- Upon any changeover, a guard timer shall prevent another changeover for a period of 15, 30, or 60 (default) minutes.
- The guard timer shall be ignored by a change of setpoint manually from either the central controller or the remote controller, by schedule, or if the secondary deadband is reached with either of the automatic changeover algorithms. The secondary changeover deadband shall be the sum of the primary changeover deadband (adjustable) ± 1°F (adjustable)
- "3D" Floor plan graphic layout
- The central controller shall have the capability for site floor plans to be uploaded as a background to create a graphics interface. Background shall be project specific floor plans rendered in "2D" or "3D".

- Floor plan layout shall be displayed both on the local central controller, as well as accessible from the web.
- Floor plan will include capability to control indoor unit, and auxiliary inputs / outputs, such as designated lighting control, as follows:
- Up to 4 status points to be assigned to the control point icon (room name, room temperature, set point, and mode).
- Status and control points to display on corresponding location of zone served on floor plan.
- Digital input and output icons will display On/Off status.
- Analog input icons will display analog value.
- Up to 60 floor layout sections shall be possible depending on project scope.
- Centralized controller shall be complete with power distribution software with the ability to generate .csv files with power consumption data for each fan coil in the system. The software shall have the ability to assess how the power consumption of the condensing units shall be distributed to each fan coil. The energy consumption files shall be accessible from the web via a restricted security access.
- Power meters, provided by others, shall be approved for use by VRF manufacturer.

- Electrical
  - Independent electrical power for fan coils and branch selector boxes shall be 208/230 volts, 1 phase, 60 hertz. The unit shall be capable of operating within the limits of 187 volts to 253 volts.
  - Unless limited by local electrical codes and standards, multiple fan coils and branch selector boxes can be connected to the same breaker. Field provided individual disconnect switches for each fan coil are required.
  - Electrical power for condensing units shall be 208/230 volts, 3 phase, 60 hertz. The unit shall be capable of operating within the limits of 187 volts to 253 volts.
  - The control voltage between the indoor and outdoor unit shall be 16VDC. The control wiring shall be communication type stranded non-shielded 18-2 AWG.
  - Control wiring shall be installed in a daisy chain configuration between all VRF components as per Manufacturer.

D3250 -OIL FIRED BOILERS

- Manufacturer

- Weil-Mclain
- Cleaver-Brooks
- Viessmann
- or approved equal

- Boiler construction
  - Boiler sections
  - Assembled with short, individual draw rods.
  - Cast with sealing grooves for high temperature sealing rope to assure permanent gas-tight seal.
  - Sealed watertight by elastomer sealing rings, not cast-iron nipples. Each port opening is machined to completely capture sealing ring between sections.
  - Must be hydro-wall design to provide completely water-cooled combustion chamber.
  - Provided with sufficient tappings to install required controls.
  - Limited 10-year warranty against workmanship and defects to be in writing by manufacturer.

- Boiler(s)
  - Provided with cast-in air elimination to separate air from circulating water.
  - Provided with expansion tank tapping to divert separated air to expansion tank.
  - Constructed to provide balanced water flow through entire section assembly using single supply and return connections for water. No external headers are necessary for water. Steam requires two or more supplies to an external header 24” minimum from the waterline to the bottom of the header.
  - Designed with a low silhouette to provide maximum headroom.
  - Furnished with insulated burner mounting plate having necessary holes and tappings to mount burner. High temperature sealing rope is used to provide permanent gas-tight seal between front section and plate.
  - Furnished with two observation ports (one in front and one in back) to allow visual inspection of the flame.
  - Provided with cast iron flue collar with a built-in adjustable damper capable of being locked into place after adjustment.

- High temperature sealing rope used to provide permanent gas-tight seal between hood and section assembly.
- Furnished with heavy gauge steel cleanout plates to cover cleanout openings on the side of the boiler(s).
- Port openings must be of captured seal design – a machined groove assures uniform compression of the sealing ring and protects the seal from contaminants. Elastomer sealing rings are to be used to provide permanent watertight seal between sections. Unlike cast iron or steel push nipples, the elasticity of the seals fills any gaps caused by misalignment or expansion or contraction.
- Shipped with insulated heavy gauge steel jacket(s) with durable powdered paint enamel finish. Jacket designed to be installed after connecting supply and return piping. Side panels can be removed without tools for easy servicing.

- Boiler foundation(s):
  - Installer to construct needed support and level concrete foundation(s) where boiler room floor is uneven or will not support the weight of the boiler(s).
- Boiler trim:
  - All electrical components to be of high quality and bear the U.L. label.
  - Water boiler(s) controls furnished:
  - Combination low temperature limit (operating) and **manual reset** high temperature limit control.
  - Low temperature limit set according to system design. High temperature limit set at least 20°F higher than the low limit (240°F is the maximum allowable water temperature).
  - Combination pressure-temperature gauge with dial clearly marked and easy to read.
  - ASME certified pressure relief valve, set to relieve at 30 PSIG. Optional relief valves available up to and including maximum allowable pressure. Side outlet discharge type; contractor to pipe outlet to floor drain or near floor, avoiding any area where freezing could occur.
  - Low pressuretrol (operating) and high pressuretrol set at maximum pressure as a safety control.
  - Gauge cock water set with gauge glass, guards and aluminum water level plate.
  - ASME certified pressure relief valve, set to relieve at 15 PSIG. Side outlet discharge type; contractor to pipe outlet to floor drain or near floor, avoid-

ing any area where freezing could occur.

- Low water cut-off for water or steam boiler(s):
- Boiler(s) to be furnished with U.L. labeled low water cut-off with ASME working pressure rating equal to the ASME rating of the relief valve.
- Do not use quick-connect fittings on boiler(s).
- Install cut-off according to manufacturer's instructions.
- Locate so burner shuts down if boiler water level falls below allowable safe waterline (steam boilers, ¼" above bottom of gauge glass).

D3260 -UNDERFROUND FUEL TANKS

- Acceptable manufacturers subject to compliance with the specifications:
  - Modern Welding
  - Xerxes
  - Clawson Tank
  - Containment Solutions
- General
  - Provide and install an underground steel tank manufactured in accordance with UL Standards 58 and 1746 (Part 2 or 3) with 100% secondary containment and a minimum 100 mil fiberglass cladding or jacket. The tank and its containment shall be listed as an assembly by Underwriters Laboratories. The primary tank shall have a total volume as noted on drawings.
- Design Criteria
  - Primary Tank: The primary tank shall be minimum 10 gauge carbon steel approved per U.L. Standard 58 and meeting the requirements of N.F.P.A. 30. The tank shall be warranted for 30 years by the manufacturer.
  - Secondary Containment with Leak Monitoring: The secondary steel tank containment shall provide at minimum 100% containment of the primary storage tank. The interstitial space shall allow liquid to migrate through it to a monitoring point. A leak detection access tube shall be located in the interstitial space between the inner tank and the secondary barrier.
  - Hold-Down Construction: Tanks shall be designed for stability with a water table at grade. Tank anti-flotation calculations shall be submitted for approval. Hold down straps shall be provided by the tank manufacturer and shall be polyester, FRP, or steel. Steel straps shall be isolated by a non-conductive material from the tank shell.

- EDIT AS REQUIRED NOTE: the height of the vent and tank location all affects the required tank pressure rating. In addition NYC requires a minimum of 25 PSIG rating. [MA Code-if static head with vent pipe filled with oil exceeds 5 psi, the tank shall be designed to withstand the maximum static head which will be imposed]

- The tank shall be rated for atmospheric pressure and shall be tested to 5 PSIG at the factory. Tank shall be suitable for other test/design pressure as required by local jurisdiction.

- Concrete Pad: Underneath the tank shall be a concrete pad. Pad shall be constructed following tank mfg's instructions and also following PEI/RP 100 code requirements for installing underground tanks. Refer instructions to concrete contractor.

- Tank Accessory Equipment

  - Engineer note: The Preferred Vent Brick is to be used where possible, except when the tank is located outside above ground and the design requires a vertical pipe with a vent cap at the top or where a vent pipe must be run up the side of the building. The vent brick is much less unsightly and piping the vent pipe behind a wall provides less possibility for damage or otherwise disrupting the venting.

  - Vent brick: As shown on drawings, install at the vent pipe termination, a standard Preferred Utilities one piece, cast aluminum Tank Vent Brick. Vent brick shall be the full size of the pipe according to NFPA 30 Flammable and Combustible liquids Code and NFPA 31 Standard for the Installation of oil burning equipment. Vent Brick is to be an integral part of the outer face of the building wall.

  - Main tank overfill alarm switch: Tank shall be fitted with a Preferred PLS-HLS high level oil switch. High Level Switch shall be arranged to (sound an alarm) (provide an electrical interlock) and activate the overfill alarm and the Fuel Oil Management Center PLC logic when the liquid level reaches 90 percent of tank capacity. Pump running circuit of the return pump(s) shall be interlocked with the High Level Switch at the Fuel Oil Management Center, which shall provide electronic instructions to shut off all pumps in the system if a return pump is the source of the overfilling, or alarm only if the cause is due to a delivery filling error. Tank High Level Switch Unit shall be float operated, suitable for #2 oil at 150 psi, have brass and Buna N wetted parts, and be mounted in a 1 1/4" tapping in the tank top. Switch shall be hermetically sealed and fully isolated from tank contents and external atmosphere. Electrical connections shall be made externally to the tank in an explosion-proof head assembly approved by UL for Class 1, Group D applications. Switch shall be as manufactured by Preferred Utilities Mfg. Corp. Model: PLS-HLS.

  - Vent line shall be equipped with a vent line switch similar to Preferred Model RBS. Switch shall be controlled by Fuel Master Control Panel.

  - Manway with Piping Sump. The tank shall be equipped with a minimum of two man ways, one or more of which will include, but not be limited to: Supply and return lines, vent, instrumentation, leak detectors, and as indicated on drawings. The man way sumps shall be of watertight polyeth-

ylene construction. Pipe and conduit penetrations into the sump shall be through a watertight sleeve. One man way shall be available unobstructed for manned vessel entry with a minimum 24" diameter.

- Access Frames and Covers. Manways and other tank risers shall be installed at grade within a traffic rated frame and cover. Covers shall be non-metallic lightweight construction.

- Inspection Port Adapter Cap: Tank shall be equipped with a 4" adapter and lockable cap for inspection and manual gauging of fuel level. Gauge port shall be accessible.

- Overfill Prevention Valve: The tank shall have an overfill prevention valve installed in the fill pipe. The valve shall close automatically at 90% of tank capacity. The valve shall incorporate a drop tube extending to within 6" of the tank bottom. Valve will be fit for gravity only. Use Preferred Utilities Mfg. type 71 and install in the tank as shown on drawing.

- The tank(s) shall be equipped, as shown on drawings, with a Preferred Utilities stand alone stainless steel pedestal type spill container where the tank truck shall gravity fill fuel into the tank from this spill container. The spill container shall have a total of five U.S. gallon holding capacity, be of NEMA 4 rated construction with a neoprene gasket door seal, three point latch locking handle (1.5", 2", 3") oil fill connection dry disconnect and dust cover. Provide with (2) 2" NPT couplings for mounting as free standing (omit couplings for in-wall). The cabinet shall be 304 stainless steel 12 gauge construction, and be equipped with1/2" NPT drain connection. Spill container is to be provided with an integral overfill alarm station, consisting of an explosion proof overfill alarm light(s), alarm horn, and Alarm silence pushbutton. The light and bell shall be automatically silenced in 90 seconds or instantly when the operator selects the Alarm Silence button. Include explosion proof digital tank contents display.

D3270 -FUEL DISTRIBUTION PIPE - ABOVEGROUND (in areas not specified as double wall).

- General
  - Provide and install steel piping aboveground as indicated on the drawings:
    - In areas not specified to be double wall.
    - In areas specifically noted to be single wall.
  - Fuel pipe connections shall be welded except where required to be threaded at tanks or specialized valves.
- Design Criteria
  - Steel Pipe: ASTM A53, Schedule 40 black.
  - Fittings: ASTM B16.3, 150 lb. threaded malleable iron, or A105, forged steel welding type.

- Finish: Prime and finish paint with industrial enamel.

- Accessory Equipment

- Acceptable Manufacturers: Preferred Utilities

  - Unions: 300 lb. malleable iron threaded unions.

  - Ball Valves: Bronze construction, two piece body, stainless steel ball and stem.

  - Motorized Ball Valves: Bronze body, stainless steel ball and stem, proof of closure and open switches.

  - Swing Check Valves: Bronze body, bronze swing disc, threaded ends.

  - Anti-Siphon Valves: Bronze body, bronze poppet, factory set non-field adjustable spring loaded, threaded ends, size to pump flow rate, UL Listed only.

  - Solenoid Valves: Forged Brass, Minimum 5 PSIG pressure differential, normally closed or open per plans, similar to Preferred Utilities # 13240-1.

  - Anti-Siphon Valve: Furnish and install at the high point of the oil suction line a UL listed and labeled Anti-Siphon Valve. Valves that do not have an Underwriters Laboratory certification, listing and label and do not conform to Local, State and Federal Fire Codes shall not be acceptable. The Anti-Siphon Valve reduces fire hazards and prevents oil spills caused by oil being siphoned from the storage tank onto the equipment room floor. The valve shall automatically shut off the oil flow in the event of a broken or inadvertently left open oil suction line. In the event of a fire, to avoid thermal expansion induced valve failure the Anti-Siphon Valve body material must be bronze. Anti-Siphon Valves supplied with CAST IRON bodies or without a UL label shall be removed and a UL certified bronze body valve will be installed at the contractor expense. Valve spring shall be factory set. Anti Siphon valves that are field adjustable are not allowed. The valve shall be factory set to meet the flow and vertical pipe height requirements of the system. The valve shall be a Preferred Utilities Mfg. Corp. Danbury, CT, Model A Anti- Siphon Valve.

  - Foot valve: Where indicated on drawings supply a Model 22 double poppet foot valve of bronze construction, with lapped-in seats, flat poppets, and 20 mesh Monel screen. Where foot valve is 1.5" or smaller, provide a Model 233-V Foot valve extractor fitting to prevent loss of prime due to air leakage and ease of removal of a clogged foot valve.

  - Vent brick or vent protector: As otherwise indicated or shown on drawings, install at the vent pipe termination, a standard vent brick or vent protector. Vent protector shall be the full size of the pipe according to NFPA 30 Flammable and Combustible liquids Code and NFPA 31 Standard for the

Installation of Oil Burning Equipment. Where applicable, supply a one piece, cast aluminum tank vent brick, which is to be an integral part of the outer face of the building wall.

- Main storage tank high level switch: Provide in the tank a model HLS tank fill alarm switch for alarming of a high level in the tank (90% tank capacity). Switch shall be float-operated, installed through the top of the tank, using a single 1.25" tapping and be suitable for pressures up to 150 PSIG, manufactured entirely of non-ferrous material, and complete with a switch rated at 100 watts. Electrical connections shall be made external to the tank in an explosion-proof head assembly approved by Underwriters Lab for Class 1, Groups C and D applications. Switch shall be wired through the main pump set control panel and also alarm at the overfill station when tank has reached high level.

- Emergency Shut-Off Valves: Provide a fusible link lever gate valve, or valves as indicated, with an automatic fuel shut-off limit switch assembly. Switch assembly shall be wired to the main pump set control panel to provide "fire" and "loss of fuel Supply" alarms and provide interlock with fuel oil pump set operation (shutting off pump).

- In-Wall Fill Box & Spill Container (for storage tanks below ground inside building): Fill line shall terminate in a flush mounted 304 stainless steel spill container, 5 gallon spill containment, with piano hinged door with three point lockable handle, be of NEMA 4 rated construction, with a neoprene gasket door seal, (1.5", 2", or 3") oil fill connection dry disconnect valve, and dust cover. Spill container is to be provided with an integral overfill alarm station, consisting of an explosion proof overfill alarm light(s), alarm horn, and Alarm Silence pushbutton. The bell shall be automatically silenced in 60 seconds or instantly when the operator selects the alarm silence button. Include explosion-proof digital tank contents display.

- Containment pipe leak sensors: Provide where shown on the drawings a leak sensor at each low point on the containment piping within the building. Leak sensor shall be lever float operated and be magnetically actuated. External to the containment vessel, switch shall be protected by a heavy duty cast aluminum NEMA 4 watertight and explosion proof wiring enclosure. Leak sensor shall be used for all storage (main and day tanks) tank vents in addition to containment piping in the building.

D3280 -2.3 FUEL OIL PUMPING AND STRAINING SET

- Acceptable manufacturers subject to compliance with the specifications:
  - Preferred Utilities
  - Viking Pump
  - IMO Pump
- Provide and install a factory assembled "Packaged" Automatic Fuel Oil Transfer and Monitoring System to ensure a reliable supply of fuel oil to the emergency generators included in this project. System to be factory fabricat-

ed/tested and certified as a complete unit. Field assembled units are not acceptable. Labels of nationally recognized Trade Unions shall cover all wiring and piping.

- The system shall include automatic pump set lead/lag and storage tank level monitoring, leak monitoring, LCD operator display, manual back-up stations, time and date stamped alarm and event summary, and the system shall include the capability to simultaneously communicate with a Data Acquisition System (DAS), building Automation System (BAS), or Building Management System (BMS) via Modbus protocol, and dial out to an alphanumeric pager system via field installable plug-in option modules in the future. The control system shall be a microprocessor based design with field expandable plug-in Input/Output modules.

- Provide a duplex pump and straining set that is factory assembled with components piped and mounted on a common base plate. Pipe shall be schedule 40 ASTM A-53 Grade "A" with ANSI B16.3 Class 150 malleable iron threaded fittings. Base plate shall include minimum 3" steel side rails, and be continuously welded out of minimum 1/4" plate steel for containment. If the pump set base footprint exceeds 31"x 64", only 3/8" steel plate can be used. Using less than these plate steel thicknesses is grounds for rejection. Base pan assembly shall have inverted steel channel supports welded to the bottom of the base pan for anchoring. Provide a 1/2" containment basin plugged drain connection. The basin shall also be sized to contain potential leaks from all factory installed piping and components. The Automatic Fuel Oil Transfer Pump and Straining Set shall be Preferred Utilities Mfg. Corp, Danbury, CT Model ATPS-104-1451-ASC rated at 155 GPH of No. 2 oil against a discharge pressure of 50 PSIG.

- Positive Displacement Pumps

  - The pumpset shall include two (2) positive displacement internal gear rotary type pumps, with cast iron housing and self-adjusting mechanical, carbon ring seals. The pump shall be capable of developing 25" Hg. Vacuum at 0 PSIG discharge pressure as factory tested. However, for normal operation, vacuum shall not exceed 15" Hg. Pump and motor combination to be rigidly, direct mounted to ASTM-A36 channel. Pumps that have aluminum, brass, or bronze housings or rotors are not acceptable. Packing gland equipped pumps, close-coupled pumps, Carbonator shaft mounted pumps or centrifugal pumps are not acceptable.

- Motors

  - The pumpset shall include two (2) TEFC, rigid base, standard NEMA frame motors. Motors sized to develop no less then 1/2 HP at 1725 RPM using 480 V, 3 P, 60 Hz electrical service. Motor shall have copper windings; a dynamically balanced rotor, ball bearings and a heavy gauge steel NEMA frame.

- Pump and Motor Assembly

  - The pumps shall be connected to the piping in the set through stainless steel flexible metallic braided jackets, and the pump and motor assemblies shall be welded to the base plate. Pumps and motors shall be mounted on an ASTM-A36 structural steel channel and equipped with flexible coupling

and full OSHA approved coupling guard. Pumps and motors shall be mounted with bolts threaded into the steel channel for ease of maintenance. Mounting bolts shall not penetrate the secondary containment basin.

- Flexible coupling general: the pump shall be connected to the motor by an elastomeric jaw type flexible coupling that does not require lubrication. The coupling wear member shall be replaceable without disturbing the alignment of either the pump or motor. Sizing of the flexible coupling shall be based on motor horsepower and rpm. Materials of construction: the coupling body shall be sintered iron and cast iron. The elastomeric wear member shall be NBS rubber.

- Pump Isolation and Check Valves

  - The pumpset shall include four (4) pump isolation valves located on the suction and discharge side of each pump. Isolation valves will allow off-line pump maintenance without system loss of availability. Isolation valves shall be ball type, rated 600 WOG, include stainless steel ball and Teflon seat. Valves to provide full flow while open and positive shutoff when closed. Additionally, two (2) class 125 # swing check valves shall be included, one (1) located on the discharge of each pump. Valves to have a regrindable bronze seat and a threaded cap.

- Fuel Oil Strainer

  - The pumpset shall include one (1) factory install duplex strainer, basin mounted, on the suction side of the pumps. Strainer to be sized for less than 1/2 psi of mercury drop through a clean strainer basket with the maximum anticipated flow in the suction line. Strainer shall be one-piece cast iron body and shall be suitable for 200 psi. Strainer baskets shall be 40-mesh stainless steel. Strainer shall come complete with lever wrench handle and be bolted in place without bolting through pan. Strainer shall be Preferred Model 72.

  - Strainer shall be equipped with a factory mounted and wired differential pressure switch to indicate that the basket needs to be cleaned. Indicating scale plate shall be three-position color-coded for easy indication of strainer basket flow status. Switch shall provide indication on the main pump set control cabinet to alert operators.

- Relief Valves

  - The pumpset shall include a relief valve downstream of each pump sized to relieve the full outlet flow of the pump without causing the pump motor to overload or any component's pressure rating to be exceeded if the discharge is inadvertently valved off. Relief valves must be externally mounted from the pumps and piped to the return line in the field according to NFPA 30. Pump internal relief valves shall not be accepted. Relief valves shall be similar to Preferred Model R-ASC.

- Compound And Pressure Gauges

  - The pumpset shall include a compound gauge on the common suction

header feeding the pumps. The gauge shall read 30" vacuum -15 psig. A second pressure gauge shall be included on the discharge side of each pump. Each gauge shall be equipped with an isolation ball valve.

- Containment Basin Leak Detection Switch
  - Provide a factory mounted and wired, float-operated containment basin leak detection switch, to shut off the pumps and energize an audible and visual alarm should a leak be detected. The leak sensor shall be a plasma welded stainless steel construction. The leak sensor shall be internally mounted within the pump basin. Electrical connections shall be contained in a factory installed weatherproof junction box.

- Pump Set Control Cabinet
  - Provide two fuel oil management control cabinets factory mounted on the fuel oil pump set. One cabinet shall include all the motor voltage components and shall include a disconnect switch that must be opened before the enclosure door can be opened. The other enclosure shall house the low voltage (120V or less) control hardware. The control cabinets shall be completely pre-wired and factory programmed and tested to ensure job site reliability. The pump set and control cabinets shall be the product of one manufacturer for single source responsibility. Cabinets to be manufactured by nationally recognized trade union personnel and is approved by a nationally recognized independent testing laboratory, equal to UL 508A. Provide a factory assembled NEMA 4 rated steel enclosure with operator interface keypad mounted on the door. All PLC indicators, manual back-up control switches and indicators must be protected from unauthorized operation by a door. All PLC indicators, manual back-up control switches and indicators must be protected from unauthorized operation by a door.

- Control and Interface
  - Supply a distributed control system composed of up to ten individual microprocessor-based PLCs communicating via a redundant master-less digital network. Individual controllers shall be programmed using function block language. Devices mounted in close proximity to each controller shall be hard-wired to the controller's analog inputs, analog outputs, digital inputs, or relay outputs. Multiple controllers shall communicate digitally using a pair of redundant two-wire communication networks. If either communication network loses communication, the other network will resume communication and provide uninterrupted control to the entire network. If any controller, or node, in the network shuts down or stops communicating, an alarm will sound and the other controllers will continue to operate. The control system logic and calibration data shall be stored in a non-volatile memory that does not require battery backup.
  - Each microprocessor controller shall include, but not be limited to, the following inputs and outputs:
    - (24) 120 VAC digital inputs
    - (5) 2 A relay outputs

- □ (5) 1/2 HP (10 A) relay outputs
- □ (8) loop-powered 4-20 mA analog inputs
- □ (3) 4-20 mA analog outputs

- Each microprocessor controller may be equipped with a 4" color touchscreen Operating Interface Terminal (OIT). The touchscreen communicates to the controller via RS-485 Modbus protocol. The touchscreens shall be pre- programmed at the factory with graphic pages for operation, setup, trouble- shooting, and alarm indication. Each touchscreen shall be capable of displaying information from any of the controllers in the distributed control system. The touchscreens can communicate to an external controller, building automation system, or energy management system via RS-485 Modbus, Ethernet TCP/IP, or BacNet IP protocol.

- Alarm and event Logs

  - The control system shall include a 200 alarms, events and operator actions memory minimum. Provide an alarm display page for viewing the most recent
    8 alarms/events with scrolling capability to view the complete 200-point alarm/event memory. Each event and alarm condition must be displayed with a distinct, descriptive, English language description and time and date stamp. New alarms shall trigger the common alarm output relay. Events shall be recorded, but shall not trigger an alarm. A dedicated alarm silence button shall silence the alarm output. The control system shall record and annunciate the following alarms: Pump Thermal Overload, Pump Loss Of Flow, Pump Set Failure, Riser leak, Containment pipe leak (each sensor), main tank overfill. The control system shall record the following events: Pump Started, Pump Control Switch in "Off" position, Pump Set Prime Test OK, return pump and levels switches Test OK, and Pump Selected as Lead.

- Fuel Pump Alternation and Lead-Lag Operation

  - Provide automatic, microprocessor-based boiler fuel supply control. The lead fuel pump shall be energized when one or more boilers call for fuel. The lead pump shall continue for the duration of the call for fuel by the boiler(s). Upon the next call for fuel, the lead pump shall be automatically alternated. Upon detection of loss of flow or lead pump thermal overload the control system shall automatically energize the backup pump and de-energize the lead pump.

- Automatic Pump Prime, Suction Line integrity test.

  - The control system shall include a battery backed, real time clock and must be capable of automatically energizing the lead pump once every day. This safety check is to verify the suction piping integrity, pump prime, and to verify pump operation. Once the lead pump has proven satisfactory operation, the lag pump shall be energized and run through the same test. These tests shall be recorded in the controller memory with a Time/Date stamp for later verification or diagnosis. If either lead or lag pump fails any of these tests, the control system shall generate an audible and visual

alarm and log the "Failed Pump" condition. If during this sequence, any pump or level switch shall prove faulty, the control system shall generate an audible and visual alarm and log such event as a "failure" condition.

- Pump Automatic Sequencing Flow Switch

  - Provide a time delayed flow sensing switch on the discharge of the pump set to bring on the lag pump should the lead pump fail to maintain flow. Flow switch shall be vane operated to actuate a single double throw snap switch.

    Switch shall be ship loose for alarm and backup pump operation. Switch shall be rated for 1450 psig. Provide a flow switch outlet isolation valve for maintaining the flow switch without draining the fuel system.

- Main Storage Tank Monitoring

  - The control system shall include main storage tank level sensor and discriminating leak sensor monitoring. Provide a continuous display of tank content, in both gallons and inches of product, within the main storage tank. Tank alarm displays shall not interfere with the display of the tank content. Provide data recall of the instantaneous display of tank content at the time of leak alarm condition and "last delivery" indication. The control system shall include an overfill alarm circuit test pushbutton to provide instantaneous proving of audible and visual alarm circuitry associated with instrument overfill alarm contact. The controller must be field expandable using plug-in input modules to monitor up to 2 storage tanks and 6 discriminating leak sensors. Provide all equipment capabilities specified in this paragraph even if a connecting level and leak sensors are not included in this project.

- Quality Assurance

  - The Control Cabinet shall be manufactured and labeled in accordance with UL508A (CSA C22.2 #14 for use in Canada). Simply supplying UL recognized individual components are not sufficient. The assembled control cabinet, as a whole, must be inspected for proper wiring methods, fusing, etc., and must be labeled as conforming to UL508A. Inspection and labeling shall be supervised by UL or other OSHA approved Nationally Recognized Test Lab (NRTL). The system must be manufactured by a nationally recognized Trade Union (I.B.E.W. or similar trade union). Lack of an NRTL certified UL508A wiring methods inspection and label or lack of a Trade Union label will be grounds for rejection.

- Factory Testing

  - Pump Sets must be fully tested prior to shipment as follows: testing shall include both a pressure and vacuum testing period. First, the complete pump set shall be pressure tested to rated pressure using an air pressure source. The test shall confirm that the pump set piping system can maintain rated pressure for 4 hours. Next, the complete pump set shall be brought to a vacuum greater than 25"Hg. The test shall confirm that the pump set piping system can maintain vacuum for 4 hours. Following a pressure and vacuum test the pump set shall be given a full operational

test. The pump set shall be connected to a fuel oil supply and return. The pump set shall be operated normally. Motor amps shall be noted at no load and full load for each motor. The motor amps shall be within 10% of rated motor amps. During the test the relief valve shall be set and tested. Operation of pump set instrumentation shall be tested. A copy of the test procedures shall be sent to the consulting engineer and owner. The owners and or the consulting engineer, at their discretion, shall observe this and all other tests. A certificate of factory testing, together with a copy of the wiring and arrangement diagrams shall be placed in the control cabinet prior to shipment.

D3290 -TANK GAUGING AND LEAK MONITORING SYSTEM

- Acceptable manufacturers subject to compliance with the specifications:
  - Preferred Utilities TG-EL-D4
  - Tidel Engineering, Inc.
  - Andover Controls/Schneider Electric
- General
  - Provide a storage tank monitoring system capable and sensing leaks in the tank and the associated piping.
- Design Criteria
  - Tank Level Transmitter: the system shall include a probe capable of detecting the fuel level in the tank. Provide a float type level sensor to provide accurate level monitoring that is unaffected by changes in the specific gravity of the tank liquid, and is suitable for use with non-corrosive fluids and fuels up to and including No. 6 fuel oil. The level sensor shall consist of a NEMA 6P rated, 1/4" cast aluminum head, connected to a float assembly by a flexible stainless steel cable. The sensor head assembly shall mount to the tank through a standard 4" 125/150 lb. flat face flange opening, with standard bolt pattern and must be capable of operating in a submerged manhole environment without damage. The unit shall be capable of easy installation and maintenance. The unit must be able to be mounted, stand, and be subsequently removed for service with only 14" of clearance between the flange and any overhead obstructions. Vertically mounted floats that take up more height to either insert or remove shall be rejected. The sensor's operation shall be unaffected by internal tank obstructions located outside of a 14" diameter cylinder extending from the top of the tank to the bottom, and centered on sensor's mount. Tank gauge calibration shall be possible at any tank fluid level (empty, part full or full). The sensor shall include an external test mechanism to allow overfill alarm and full tank calibration checks without removal of the sensor from the tank. Tests that electronically simulate a high tank level, instead of physically moving the float, are not acceptable. Where applicable, an ultrasound device can be substituted for the above tank float.
  - Monitoring Panel: provide a microprocessor-based tank gauging, leak de-

tection, and overfill prevention system per NFPA 30 Flammable and Combustible Liquids Code, NFPA 31 Standard for the Installation of Oil- Burning Equipment, and NFPA 110 Standard for Emergency and Standby Power Systems. The tank gauge shall be provided complete with printer and RS485 Modbus interface to the BAS for each storage tank indicated on the drawings. The indicator, printer, level sensors, leak sensors, and overfill alarm station shall be supplied by one manufacturer. The indicator and sensors shall be intrinsically safe for Class 1, Division 1, Group D hazardous locations as defined by the National Electric Code. The monitoring panel shall display the tank volume in gallons. The panel shall indicate alarm conditions for fuel high level, fuel low level, tank leak and containment pipe leak. The indicator shall have a bright 4" bargraph display that is clearly visible from 20 foot viewing distance and shall be able to monitor either 1 or 2 tanks. All sensors signals shall be either 4-20 mA or contact closure for easy interchangeability of field devices. All leak sensors shall be automatically tested by the indicator on a daily basis with the result shown on the printed reports. Continuous sensor wiring fault detection (open or shorted) shall be provided. Automatic delivery detection logic shall trigger a printed, and data

logged, report displaying the time, date, and amount delivered for delivery verification. The system shall be field upgradeable to dual sensors for higher accuracy delivery reporting and/or density shift detection in the event that delivery "shorting" is suspected. Provide idle tank theft alarming capability for standby tanks or emergency generator tanks as required.

- The system shall be fully field configurable. The system shall be able to automatically generate a stick chart based on measured delivery flow and measured level if an accurate stick chart is not available for the tank.

- The printer shall automatically, or manually, print:

  - Current inventory
  - Time/date
  - Gallons of the last 7 deliveries
  - Last 7 daily consumptions
  - Last 5 weekly consumptions
  - Last 10 time/date stamped alarms

D3300 - LEAK DETECTION

- Engineering Note: Review the design to meet codes including leak detectors to be located properly. Insure coverage but eliminate redundancy. Revise item A. to reflect exactly how many leak detectors are needed and where to be located.

- Provide and install leak detectors in the annular space within the double wall tank (the piping sump and/or floor or vault below the storage tank as shown on the drawing). The leak detectors shall be solid state and discriminate between

oil and water, display the leak with (2) LED's on its indicating transmitter, and send an appropriate alarm signal to the Tank Gauge. All leak detectors shall be intrinsically safe, have continuous electronic checking, fail safe to an alarm condition, and have indicating transmitters with a magnetic test mechanism at grade level to exercise the sensors and check the Tank Gauge response. Tests that bypass the sensors or rely only on electronic simulation are unacceptable

- EDIT AS REQUIRED NOTE: Used for underground tanks.

- Piping Sump Sensor: A sensor shall be provided for installation in the piping sump to detect a leak in the fuel piping system. The sensor shall set off an audible and visual alarm on the control panel. Sensor to be able to discriminate between oil and water.

- Provide and install an overfill alarm station for 1-3 tanks that will alarm when signaled from one of the above tank gauges when an overfill condition has been reached. The overfill alarm panel shall contain a 4" weatherproof alarm horn with automatic silencing, 180 degree flashing lamp, bell silencing pushbutton, and alarm test pushbutton. Optional gallons display can be added. Alarm can be instantly silenced with the silencing pushbutton or in 90 seconds automatically if silencing pushbutton is not activated.
- Provide and install an Overfill Caution Sign near the Overfill Alarm Station. The sign shall be 20"W by 14"H of 18 gauge steel with porcelain baked enamel finished bright yellow background and minimum 2"H black lettering. The Caution Sign shall read: CAUTION WHEN ALARM BELL SOUNDS OIL TANK FILLED TO CAPACITY DO NOT OVERFILL.

D3310 -HOT WATER PUMPS

- Circulating pumps shall be Bell and Gossett, Armstrong, Taco, or approved equal, and shall be of number type and size as scheduled on the drawings.

- Base-mounted Pump:

  - Furnish and install centrifugal end suction single stage pump(s) with capacities and characteristics as shown on the plans.

  - Pump volute or casing shall be center-line discharge for positive air venting constructed of class 35 cast iron with integrally cast mounting feet. The pump shall be fitted with replaceable bronze wear rings, drilled and tapped for gauge ports at both the suction and discharge flanges and for drain port at the bottom of the casing.

  - The impeller shall be bronze and hydraulically balanced by either back vanes or back wear ring and balancing holes. The impeller shall be dynamically balanced and shall be fitted to the shaft with a key.

  - The pump shall incorporate a dry shaft design to prevent the circulating fluid from contacting the shaft. The pump shafts shall be high tensile steel with replaceable bronze shaft sleeve.

- The cast iron pump bearing housing shall have heavy duty regreasable ball bearings replaceable without disturbing the piping connections and shall have a foot support at the driver end.

- The pump shall have a self-flushing seal design or a positive external seal flushing line. Any mechanical seal pump used on an open system shall be furnished with a seal flush line and a Purocell #900 replaceable cartridge filter wide shut-off isolation valve installed in the seal flushing line. The filter shall have the ability to remove particles down to five microns in size.

- The pump seal shall be EPT Ceramic rated to 250 ºF.

- The base shall be made of structural steel and incorporate a guide rail system to allow the pump and motor to be slid apart for service without risking major misalignment or disturbing the piping. The base shall also include a built-in drain pan. A flexible coupler shall connect the pump to the motor and shall be covered by a coupler guard. Contractor shall level and grout each pump according to the manufacturer's recommendations to insure proper alignment prior to operation.

- Provide at each pump a suction diffuser. Units shall consist of angle type body with inlet vanes and combination diffuser-strainer-orifice cylinder with 3/16-inch diameter openings for pump protection. A permanent magnet shall be located within the flow stream and shall be removable for cleaning. The orifice cylinder shall be equipped with a disposable fine mesh strainer which

  shall be removed after system start-up. Orifice cylinder shall be designed to withstand pressure differentials equal to pump shutoff head and shall have a free area equal to five (5) times cross suction opening. Vane length shall be no less than 2-1/2 times the pump connection diameter. Unit shall be provided with adjustable support foot to carry weight of suction piping. Body of suction diffuser shall be cast iron; the inlet vanes and orifice cylinder shall be stainless steel and the strainer shall be 16 mesh bronze.

- Inline Pump: Provide in-line centrifugal type pumps and motors, bronze finished. Maximum working pressure shall be 125 psi. Pumps shall have seals, bronze fitted of type recommended and guaranteed to be suitable for the service intended and the water conditions prevailing.

D3320 -SPECIALTIES

- Air vent valves on all main piping systems shall be 1/4" manual gate valves Powell Fig. 507, Lunkenheimer, Crane, or approved equal.

- Vent valves on coils shall be Bell & Gossett No. 4V, Taco, Armstrong or approved equal.

- Relief valve shall be Bell & Gossett No. 790-50, Taco, Armstrong, or approved equal, set at 50 psi, 3/4" inlet, 3/4" outlet.

D3330 -PIPE AND FITTINGS

- Furnish all pipe and fittings required for the HVAC systems, including hot water supply (HWS), hot water return (HWR), drain (D), and cold-water make-up piping.

- All mechanical room hot water supply (HWS), and hot water return (HWR) piping 2-1/2" and larger shall be Schedule 40 seamless black steel pipe and shall conform to ANSI B-36.10 and ASTM A-53, grade A or B. All piping 2" and below shall be Type L hard drawn copper, ASTM B88 with 95/5 solder fittings, Schedule 40 seamless steel welding fittings.

- Unions for use with steel piping shall be 300-pound malleable iron, ground joint, or 2,000-pound forged steel, 600 psi WOG, sweat or thread end as required. Unions for copper pipe shall be bronze, ground joint, 600 psi WOG, sweat or thread end as required.

- Drain (D) and Cold-water make-up piping shall be Type L hard drawn copper, ASTM B88 with wrought copper ANSI B16.22 fittings. Joints shall be soldered, ASTM B32, with 95/5 solder.

- Chemical Feed (CF) Piping:

  - Pipe: Seamless steel; ASTM A106, Grade A or B; Schedule 10.

  - Fittings: Threaded, 300-pound malleable iron, ANSI B16.3.

  - Unions: 300-pound malleable iron, ground ball joint with all iron seats, ANSI B16.39; or 2000 pound non-shock WOG forged steel, ASTM A105.

  - Joints: Threaded.

- Provide dielectric unions at all connections of dissimilar metals. Dielectric unions shall be factory certified to withstand a minimum of 600 volts on a dry line with no flashover, rated 250 psig and conforming to ANSI B16.39. Dielectric union and flange pipe threads shall conform to ANSI B2.1.

D3340 -Energy Recovery Ventilators

- Manufacturers: Subject to compliance with specifications contained within this document, manufacturers offering products that may be incorporated into the work include, but are not limited to:

  - Greenheck Fan Corporation

  - Valent

  - York

D3350 -MANUFACTURED

UNITS

- Packaged Air-to-Air Energy Recovery Units shall be fully assembled at the factory and consist of an insulated metal cabinet, motorized insulated low leakage intake damper, filter assemblies for both intake and exhaust air, energy wheel, airside coil, engineered P trap assembly with P trap, reheat coil, supply air blower assembly, indirect gas-fired furnace, insulated low leakage exhaust air damper, exhaust air blower assembly electrical control unit with all specified components and internal accessories factory installed and tested and prepared for single-point high voltage connection. Entire unit with the exception of field-installed components shall be assembled and test operated at the factory.

D3360 -CABINET

- Materials: Formed, insulated double wall construction, fabricated to permit access to internal components for maintenance.
- Outside casing: 18 gauge, galvanized (G90) steel meeting ASTM A653 for components that do not receive a painted finish.
- Internal assemblies: 20 gauge, galvanized (G90) steelexcept for motor supports which shall be 14 gauge galvanized (G90) steel.
- Cabinet Insulation: Comply with NFPA 90A and NFPA 90B and erosion requirements of UL 181
- Materials: Fiberglass insulation. If insulation other than fiberglass is used, it must also meet the Fire Hazard Classification shown below.
    - Thickness: 1 inch (25 mm)
    - Fire Hazard Classification: Maximum flame spread of 25 and smoke developed of 50, when tested in accordance with ASTM C 411.
    - Location and application: Full coverage of entire cabinet exterior to include walls and roof of unit. Insulation shall be of semi-rigid type and installed between inner and outer shells of all cabinet exterior components.
    - Materials: Rigid urethane foam
    - Thickness: 1 inch (25 mm)
    - Meets UL94HF-1 flame requirements.
    - Location and application: Doors and the floor of the unit.
- Access panels / doors: Unit shall be equipped with insulated, hinged doors or removable access panels to provide easy access to all major components. Doors and access panels shall be fabricated of 18-gauge galvanized G90 steel.
- Condensate drain pan: Pan shall be formed of welded austenitic stainless-steel sheet material and provided with a welded drain connection at the front for connection to a P trap. Drain pan shall be sloped in two directions to provide positive draining.

- P trap: An engineered P trap (condensate drain) assembly shall be provided for each unit, to include cleanout ports, cleanout tool, vacuum break device and see- through reservoir to permit visual verification of water or glycol solution levels.

- Energy wheel: Energy wheel shall be of total enthalpy, rotary air-to-air type and shall be an element of a removable energy wheel cassette. The cassette shall consist of a galvanized steel framework (designed to produce laminar air flow through the wheel), an energy wheel as specified and a motor and drive assembly. The cassette shall incorporate a pre-tensioned urethane drive belt with a five-year warranty. The wheel media shall be a polymer film matrix in a stainless-steel framework and be comprised of individual segments that are removable for servicing. Non-segmented energy wheels are not acceptable. The polymer film material shall be coated with silica gel desiccant and shall be designed and constructed to permit cleaning and servicing. The energy wheel is to have a five-year warranty. Performance criteria are to be as specified in AHRI Standard 1060, complying with the Combined Efficiency data in the submittal.

- Compressed refrigerant coils shall be AHRI Certified and shall be (silver) soldered or brazed into the compressed refrigerant system. Coil shall be constructed of copper tubing, permanently bonded to aluminum fins and enclosed in a galvanized steel frame. If two compressors are used as components of a packaged DX system in the ERU, then the evaporator coil shall be of "interlaced" configuration, permitting independent operation of either compressor without conflict with the other compressor.

- Supply Air and Exhaust Air blower assemblies: Blower assemblies consist of an electric motor and a belt driven blower. Assembly shall be mounted on heavy gauge galvanized rails and further mounted on 1.125-inch-thick neoprene vibration isolators.

- Control panel / connections: Energy Recovery Unit shall have an electrical control center where all high and low voltage connections are made. Control center shall be constructed to permit single-point high voltage power supply connections. Optional electric post heater shall have a separate electrical control center and separate high voltage power circuit as shown on the plans.Optional electric post heater shall have a separate electrical control center and separate high voltage power circuit as shown on the plans.

- Reheat coil with factory installed modulating hot gas reheat valve.

- Shall be encased in a weather-tight metal housing with intake air vents. Large, metal lift-off or hinged door shall provide easy access to the enclosed vest plate, control circuitry, gas train, burner assembly and exhaust blower.

- Packaged DX System: Energy Recovery Air Unit shall have an integral compressor(s) and evaporator coil located within the weather-tight unit housing. Condenser coils and appurtenant condenser fan assemblies shall be factory installed as integral subassemblies of the ERU and mounted on the exterior of the ERU. Condenser fan motors shall be three phase, type 56 frame, Open Air Over and Shaft Up. Each condenser fan motor shall have a vented frame, rated for continuous duty and be equipped with an automatic reset thermal protector. Motors shall be UL Recognized and CSA Certified. The refrigerant

compressor(s) shall be hermetic scroll-type and shall be equipped with liquid line filter drier, thermal expansion valve (TXV), manual reset high pressure and low-pressure cutouts and all appurtenant sensors, service ports and safety devices. Compressed refrigerant system shall be fully charged with R-410A refrigerant. Each compressor shall be factory-equipped with an electric crankcase heater to boil off liquid refrigerant from the oil. Hot gas bypass shall be provided on the lead circuit to prevent icing of the evaporator coil under low load conditions.

Packaged DX Control and Diagnostics: The Packaged DX system shall be controlled by an onboard digital controller (DDC) that indicates both owner-supplied settings and fault conditions that may occur. The DDC shall be programmed to indicate the following faults:

- Global alarm condition (active when there is at least one alarm)
- Supply Air Proving alarm
- Dirty Filter Alarm
- Compressor Trip alarm
- Compressor Locked Out alarm
- Supply Air Temperature Low Limit alarm
- Sensor #1 Out of Range (outside air temperature)
- Sensor #2 Out of Range (supply air temperature)
- Sensor #3 Out of Range (cold coil leaving air temperature)

- Motorized dampers / Exhaust Air, Intake Air, Motorized dampers of insulated low leakage type shall be factory installed.

D3370 -BLOWER SECTION

- Blower section construction, Supply Air and Exhaust Air: Belt drive motor and blower shall be assembled onto a 14-gauge galvanized steel platform and must have neoprene vibration isolation devices.
- Blower assemblies: Shall be statically and dynamically balanced and designed for continuous operation at maximum rated fan speed and horsepower.
- Centrifugal blower housing: Formed and reinforced steel panels to make curved scroll housing with shaped cutoff.
- Forward curved blower (fan) wheels: Galvanized or aluminum construction with inlet flange and shallow blades curved forward in direction of airflow. Mechanically attached to shaft with set screws.
- Blower section motor source quality control: Blower performance shall be factory tested for flow rate, pressure, power, air density, rotation speed and effi-

ciency. Ratings are to be established in accordance with AMCA 210, "Laboratory Methods of Testing Fans for Rating".

D3380 -MOTORS

- General: Blower motors greater than 3/4 horsepower shall be "NEMA Premium" unless otherwise indicated. Compliance with EPAct minimum energy-efficiency standards for single speed ODP and TE enclosures is not acceptable. Motors shall be heavy-duty, permanently lubricated type to match the fan load and furnished at the specified voltage, phase and enclosure. Drives shall be sized for a minimum of 150% of driven horsepower and pulleys shall be fully machined cast-type, keyed and fully secured to the fan wheel and motor shafts. Electric motors of ten horsepower or less shall be supplied with an adjustable drive pulley.

- Motors shall be 60 cycle, 3 phase 208 volts.

D3390 -UNIT CONTROLS

- The ERU shall be constructed so that it can function as a stand-alone heating and cooling system controlled by factory-supplied controllers, thermostats and sensors or it can be operated as a heating and cooling system controlled by a Building Management System (BMS).

D3400 -FILTER SECTION

- Energy Recovery Unit shall have permanent metal filters located in the outdoor air intake and shall be accessible from the exterior of the unit. Combination of MERV 8 and MERV 13 pleated filters shall be provided in the intake air stream and MERV 8 filters in the exhaust air stream.

D3410 -PIPE HANGERS, SUPPORTS, INSERTS

- Carpenter and Patterson, Grinnell, Calco, or approved equal. Figure numbers listed are Carpenter and Patterson numbers.

- General: Piping systems shall be supported in accordance with ANSI B31.1 so as to maintain required pitch of lines, prevent vibration, and provide for expansion and contraction movement.

- Piping hangers and supports shall be furnished and installed for piping. Provide all components (i.e., inserts, rods, clamps, hangers, washer, lock nuts, rollers, etc.) necessary for a complete installation.
- Hangers:
    - Hangers for hot water supply, dual water and chilled water piping shall be Figure 100SH refrigeration hanger and shield.
    - Hangers for all other piping shall be Figure 1A Bands.

- All hangers shall be with supporting rods and nuts. Rod sizes shall be as follows:

  Hangers for pipes 4" and larger 5/8"
  Hangers for pipes 2-1/2" and 3 " 1/2"
  Hangers for pipes 2" and smaller 3/8"

- Pipe covering protection saddles shall be Series 350 galvanized steel and shall be furnished for installation at each hanger where pipes are insulated.

- Upper Attachments to Building Structure:

- Reinforced Concrete Construction: Upper attachment welded or clamped to steel clip angles which are expansion-bolted to the concrete. Expansion bolting shall be located so that piping loads place bolts in shear.

- Structural Framing: Upper attachments welded or clamped to structural steel members. Additional steel members may be necessary in some support locations where piping locations differ from that known on contract drawings.

- Submit details for approval.

- Expansion Fasteners and Power Set Fasteners: In concrete ceiling construction, expansion fasteners may be used for hanger loads up to one-third the manufacturer's rated strength of the expansion fastener. Power set fasteners may be used for loads up to one-fourth of rated load. When greater hanger loads are encountered, additional fasteners may be used and interconnected with steel members combining to support the hanger.

D3420 -REFRIGERANT PIPE AND FITTINGS

- Furnish all pipe and fittings required for the HVAC systems, including hot water supply refrigerant (RGL, RGS) and Drain (D).

- Drain (D) piping shall be Type L hard drawn copper, ASTM B88 with wrought copper ANSI B16.22 fittings. Joints shall be soldered, ASTM B32, with 95/5 solder. PVC piping is acceptable on roof.

- Refrigerant Piping (RGL, RGS) and Accessories:

  - Pipe: Type L hard drawn ACR tubing, ASTM B280.

  - Fittings: Wrought copper, ANSI B16.22.

  - Joints: Silver solder, minimum 45% silver brazing alloy, cadmium free, ASTM B32.

- Refrigerant Systems Accessories:

- Refrigerant Solenoid Valve: Provide valve with sweat type valve connections, ductile iron and brass body construction, stainless steel and brass internal parts, teflon diaphragm, neoprene pilot seat, stainless steel springs and 120 volt/60 Hz coil assembly. Valve shall be sized in accordance with manufacturer's printed instructions.

- Thermal Expansion Valves: Provide valves of brass body with copper fittings, stemless steel diaphragms, brass and stainless steel internal parts, replaceable power element, factory maximum operating pressure charge to maintain super heat control over evaporator temperature range, 1/4" external equalizer connection, sweat connection in a straight through flow configuration and remote bulb with 60" tubing length.

- Hot Gas Bypass Pressure Regulating Valve: Provide valves of brass body with copper fittings, stainless steel diaphragm, brass and stainless-steel internal parts, 1/4" external equalizer connection and sweat connection in a straight through flow configuration. Valves shall be sized for effective part connections in accordance with manufacturer's printed instructions.

- Refrigerant Sight Glass Moisture Indicator: Provide device of copper plated steel construction, removable leak proof fused sight glass with universal indicator element for Refrigerant, clear liquid viewing area, scratch resistant glass and O-Ring for leak proof seal. Valve shall have sweat connections.

- Liquid Line Filter Dryers: Provide filter dryers of heavy gauge steel shell with corrosion resistant paint, copper plated sweat fittings, perforated baffle support plates, and filled with chemically inert molecular sieve head capable of filtering contaminated particles down to 20 microns.

- Pressure Relief Valves: Shall be of relief setting as indicated. Valves shall be of cast iron bodies with bronze seat rings in frame and flap and with bronze hinge pins. Provide relief valve discharge piping to nearest floor drain. Valves shall be sized at indicated relief pressure in accordance with manufacturer's printed recommendations.

- Flexible Piping Connections: Provide at refrigerant piping connections to ACCUs. Connections to be braided bronze construction with copper sweat ends; working pressure suitable for pressures encountered in systems.

D3430 -HYDRONIC PIPE AND FITTINGS

- Furnish all pipe and fittings required for the HVAC systems, including hot water supply (HWS), hot water return (HWR), drain (D), and cold-water make-up piping.

- All hot water supply (HWS) and hot water return (HWR), piping 2-1/2″ and larger shall be Schedule 40 seamless black steel pipe and shall conform to ANSI B-
36.10 and ASTM A-53, grade A or B with Schedule 40 seamless steel fittings and, welded or mechanical connections. All piping 2″ and below shall be Type L hard drawn copper, ASTM B88 with 95/5 solder fittings.

- Unions for use with steel piping shall be 300-pound malleable iron, ground joint, or 2,000-pound forged steel, 600 psi WOG, sweat or thread end as required. Unions for copper pipe shall be bronze, ground joint, 600 psi WOG, sweat or thread end as required.
- Drain (D) and Cold-water make-up piping shall be Type L hard drawn copper, ASTM B88 with wrought copper ANSI B16.22 fittings. Joints shall be soldered, ASTM B32, with 95/5 solder.
- Chemical Feed (CF) Piping shall be seamless steel; ASTM A106, Grade A or B; Schedule 10 with threaded, 300-pound malleable iron, ANSI B16.3 fittings. Unions shall be 300-pound malleable iron, ground ball joint with all iron seats, ANSI B16.39; or 2000 pound non-shock WOG forged steel, ASTM A105.
- Provide dielectric unions at all connections of dissimilar metals. Dielectric unions shall be factory certified to withstand a minimum of 600 volts on a dry line with no flashover, rated 250 psig and conforming to ANSI B16.39. Dielectric union and flange pipe threads shall conform to ANSI B2.1.

D3440 -HYDRONIC VALVES & SPECIALTIES

- Gate valves, globe valves and butterfly valves shall be Powell, Lunkenheimer, Crane, or approved equal. Figure numbers herein are Powell numbers.
    - Gate valves 2-1/2" and larger shall be Figure 1793, 125#, I.B.B.M., solid wedge, O S & Y, rising spindle, flanged end.
    - Globe valves 2-1/2" and larger shall be Figure 241, 125#, I.B.B.M., O S & Y with regrind - renew beveled bronze disc and seat ring, flanged end.
    - Butterfly valves 2-1/2" and larger shall be Figure 1572, 125#, API 609, carbon steel body and seat, stainless steel disc, PTFE packing/gasket, gear operator and lug or flanged style.
    - Where isolation valves are indicated on plans either gate or butterfly valves will be acceptable.
- Check valves and draw-off valves shall be Powell, Lunkenheimer, Crane, or approved equal. Figure numbers herein are Powell numbers.
    - Check valves 2-1/2" and larger shall be Figure 559, 125#, I.B.B.M., horizontal swing type, with regrind-renew bronze seat ring and disc, flanged end.
    - Check valves 2" and smaller shall be Figure 578, 125# bronze, horizontal swing type with regrinding bronze seat and disc, screwed end.
    - Draw-off valves shall be Figure 503H, bronze, screwed inlet, hose outlet.
- Balancing valves shall be Taco Model CS, Bell & Gossett, Armstrong, or approved equal, circuit setter
    - Ball valve construction, Teflon seats, calibrated nameplate, Schrader valve

connections, cast bronze.

- Valves 2" and smaller shall be ball valves. Ball valves shall be Jenkins Figure 32-A, Crane, Stockham or approved equal, bronze ball valves with bronze ball, Teflon seats, brass stem and cadmium plated steel handle with plastic grips.

- Pressure-reducing Valves
  - Bell and Gossett, Armstrong, Taco or equal.
  - Diaphragm operated pressure-reducing valve with low inlet pressure check valve and inlet strainer. The strainer shall be easily removable without system shutdown. The valve seat, strainer and stem shall be removable and of non-corrosive material. The body shall be brass. The valve shall be full line sized as shown on the Drawings. Pressure setting to be minimum system operating pressure.
- Multi-Purpose Pump Discharge Valves (furnish at the discharge of all hydronic heating pumps)
  - Bell and Gossett, Armstrong, Taco or Equal
  - Valves to be designed to permit tight system shutoff and then return to original balance point after shutdown, to perform as a spring-loaded non-slam check valve and to perform as a plug-type flow control valve. Valve to be able to be repacked under full pressure. Valve to be suitable for use in heating systems with working temperatures up to 230 ° F.
  - Valve to have flanged, ductile-iron body, bronze disc and seat, stainless steel stem and spring. Valve body to be furnished with two 1/4" plugged drain tappings.
  - Valves shall be equipped with Schrader valve metering connections to facilitate differential pressure readings across the valve orifice for accurate system balancing.
  - Each valve to be furnished with a pre-formed removable PVC insulation jacket with high density fiberglass insulation suitable for temperatures up to 230 ° F continuous.
- Combination Balancing/Shutoff Valves: Furnish and install circuit balancing valves as shown on plans and in accordance with the manufacturer's installation instructions.
  - Bell and Gossett, Armstrong, Flow Design or Equal
  - Each valve shall have two 1/4" NPT brass metering ports with Nordel check valves and gasketed caps located on both sides of valve seat. Two additional 1/4" NPT connections with brass plugs are to be provided on the opposite side of the metering ports for use as drain connections. Drain connections and metering ports are to be interchangeable to allow for measurement flexibility when valves are installed in tight locations.
  - Valves are to be of the "Y" pattern, modified, equal percentage globe style

and provide three functions: precise flow measurement; precision flow balancing; positive drip tight shut off.

- Valve shall provide multi-turn, 360-degree adjustment with a micrometer type indicator located on valve handwheel. Valve handwheel shall have hidden memory feature which will provide a means for locking the valve position after the system is balanced.
- Valve body for valves 1/2" to 2" size shall be bronze with ultra-high strength engineered resin plug. The plug shall have precision-contoured channels to distribute flow uniformly across valve seat. Bronze stem and high strength resin hand-wheel and sleeve. Valves shall have a minimum of four full 360- degree hand-wheel turns. Connections to be thread or sweat.
- Valve body for 2-1/2" and larger size valves shall be ductile iron with flanged ends. Valve stem and plug disc shall be bronze. Hand-wheel shall be ergonomically designed providing ease of adjustment. Valve body to be convertible in the field from straight to 90-degree change of flow. Field conversion shall not affect valve accuracy.
- Valve shall be installed with flow in the direction of the arrow on the valve body and installed at least five pipe diameters downstream from any fitting, and at least ten pipe diameters downstream from any pump. Two pipe diameters downstream from the valve should be free of any fittings. When installed, easy and unobstructed access to the valve hand-wheel and metering ports for adjustment and measurement are to be provided. Mounting of valve in piping must prevent sediment build-up in metering ports.
- Provide all balancing valves with molded removable pre-formed insulation with PVC jacket.
- Valve size to match pipe size.

D3450 -HOT WATER COILS

- Acceptable Manufacturers: Trane, Carrier, McQuay, or approved equal.
- Unit Casing
  - The coil case shall be constructed of G90 galvanized steel. Casing finished to meet ASTMB 117 250-hour salt-spray test. The removal of side panels shall not affect the structural integrity of the unit. All removable panels shall be gasketed to minimize air leakage. Contractor shall be responsible to provide connection flanges and all other framework that is needed to properly support the unit.
  - Insulation - High density, matte faced - Interior surface of unit casing acoustically and thermally. Insulation shall have a minimum R-value of 4 and shall be UL listed. The installation shall comply with NFPA-90A and B requirements.
- Coils: Coils shall be manufactured by the supplier of the air handling unit. Coils shall be installed such that headers and return bends are enclosed by unit cas-

ings. Coils shall be removable by unbolting the wall panels in the coil section. Coil connections shall be clearly labeled on outside of units. Coils shall have aluminum plate fins and seamless copper tubes. Fins shall have collars drawn, belled, and firmly bonded to tubes by mechanical expansion of the tubes. Soldering or tinning shall not be used in the bonding process. Fin surfaces shall be cleaned prior to installation in the unit to remove any oil or dirt that may have accumulated on the fin surfaces during manufacturing of the coil. Capacities, pressure drops, and selection procedure shall be certified in accordance with ARI Standard 410.

D3460 -STRAINERS

- Bell and Gossett, Armstrong, Watts or Equal
- Provide a "Y" type full size strainer as indicated on the Drawings.
- An approved dirt blowout connection shall be made to each strainer, with 1" Jenkins Figure 372 and Figure 658 cap and chain; the valve located six inches to twelve inches below the strainer. In the case of strainers under full water pressure, the blowout connection shall terminate at a point where there will be no risk of flooding or damage.
- Strainers 2" diameter and smaller shall have screwed ends. Strainers 2-1/2" diameter and larger shall have flanged ends.
- Strainers 2" and smaller shall be full size, bronze, "Y" pattern: Tate Temco Figure IY, Spirax Sarco, Mueller or approved equal.
- Strainers 2-1/2"or larger shall be cast steel body, "Y" type; Tate Temco figure IY, Spirex Sarco, Mueller or approved equal, 150 psi rating.
- Total open area of basket perforations shall be at least three times the inside area of pipes.
- Strainer baskets shall be stainless steel with 1/16" perforations (up to 2" size) and 1/8" perforations (2-1/2" and larger).

D3470 -EXPANSION TANKS

- Provide a Amtrol, Taco, Bell & Gossett Armstrong, or approved equal, expansion tank where indicated as scheduled and specified.
- See HVAC schedule for tank size and characteristics.
- Tank shall be constructed (and nameplated) for 125 psi working pressure, fabricated of steel designed & constructed per ASME Section VIII, Div. 1.
- Tank shall have a heavy-duty butyl rubber bladder removable for inspection. Tank shall be “full acceptance” type.

D3480 -HYDRAULIC SEPARATOR

- The primary/secondary header shall be as manufactured by Spirotherm, Bell & Gossett, Caleffi, or approved equal.

- Furnish and install as shown on plans a primary/secondary header with insulation. The header shall be designed for maximum operating pressure of 150 PSI at a maximum operating temperature of 210°F/220°F/230°F. The header shall function as a combination air separator and manifold that creates independent primary and secondary circuits. The header body shall be made of steel and equipped with brass air vent and drain valve.

D3490 -Thermometers and Pressure Gauges

- Thermometers and pressure gauges shall be Trerice, Ashcroft, Taylor or approved equal complete with all required wells. Model numbers used are Trerice numbers.

- Thermometers shall be Model BX9, industrial thermometers, adjustable angle, 9" case.

- Thermometer ranges shall be 0 °F to 200 °F for use in hot water piping.

- Pressure gauges shall be Model 500

X. D3500 -Bypass Shot Feeder

- Furnish and install ASME 125 psi working pressure, 5-gallon vertical steel bypass feeder, and accessories as detailed on the drawings. Manufacturer shall be Neptune, Vector, J.L. Wingert or approved equal.

D3510 -Specialties

- Air vent valves on all main piping systems shall be 1/4" manual gate valves Powell Fig. 507, Lunkenheimer, Crane, or approved equal.

- Vent valves on coils shall be Bell & Gossett No. 4V, Taco, Armstrong or approved equal.

- Relief valve shall be Bell & Gossett No. 790-50, Taco, Armstrong, or approved equal, set at 50 psi, 3/4" inlet, 3/4" outlet.

D3520 -CONDENSATE PIPE AND FITTINGS

- Furnish all pipe and fittings required for the HVAC systems, including condensate drain piping (C).

- All hot water supply (HWS) and hot water return (HWR), piping 2-1/2″ and larger shall be Schedule 40 seamless black steel pipe and shall conform to ANSI B-

36.10 and ASTM A-53, grade A or B with Schedule 40 seamless steel fittings and, welded or mechanical connections. All piping 2″ and below shall be Type L hard drawn copper, ASTM B88 with 95/5 solder fittings.

- Condensate Drain Piping (C) shall be Type L hard drawn copper, ASTM B88 with wrought copper ANSI B16.22 fittings. Joints shall be soldered, ASTM B32, with 95/5 solder.

- Provide dielectric unions at all connections of dissimilar metals. Dielectric unions shall be factory certified to withstand a minimum of 600 volts on a dry line with no flashover, rated 250 psig and conforming to ANSI B16.39. Dielectric union and flange pipe threads shall conform to ANSI B2.1.

D3530 -BOILER FLUE AND INTAKE PIPING

- Boilers
  - Flue piping shall be AL-29-4C stainless steel double wall pipe or approved equal in compliance with the boiler manufacturer's installation requirements and guidelines.
  - Combustion air pipe shall be Schedule 40 or Schedule 80 CPVC pipe.
  - Flue and combustion air piping shall be installed per the manufacturer's installation guidelines.
  - Contractor shall be responsible for coordinating boiler flue and intake adapter fittings as required by manufacturer.

D3540 -PIPE HANGERS, SUPPORTS, INSERTS

- Carpenter and Patterson, Grinnell, Calco, or approved equal. Figure numbers listed are Carpenter and Patterson numbers.
- General: Piping systems shall be supported in accordance with ANSI B31.1 so as to maintain required pitch of lines, prevent vibration, and provide for expansion and contraction movement.
- Piping hangers and supports shall be furnished and installed for piping. Provide all components (i.e., inserts, rods, clamps, hangers, washer, lock nuts, rollers, etc.) necessary for a complete installation.
- Hangers:
  - Hangers for all piping shall be Figure 1A Bands.
  - All hangers shall be with supporting rods and nuts. Rod sizes shall be 3/8".
  - Pipe covering protection saddles shall be Series 350 galvanized steel and shall be furnished for installation at each hanger where pipes are insulated.
- Upper Attachments to Building Structure:

- Reinforced Concrete Construction: Upper attachment welded or clamped to steel clip angles which are expansion-bolted to the concrete. Expansion bolting shall be located so that piping loads place bolts in shear.

- Structural Framing: Upper attachments welded or clamped to structural steel members. Additional steel members may be necessary in some support locations where piping locations differ from that known on contract drawings.

- Submit details for approval.

- Expansion Fasteners and Power Set Fasteners: In concrete ceiling construction, expansion fasteners may be used for hanger loads up to one-third the manufacturer's rated strength of the expansion fastener. Power set fasteners may be used for loads up to one-fourth of rated load. When greater hanger loads are encountered, additional fasteners may be used and interconnected with steel members combining to support the hanger.

D3550 -CABINET UNIT HEATERS

- Acceptable Manufactures are Sterling, Trane, McQuay or approved equal.

- Cabinet

  - Floor units shall be provided with stamped louvers and a 1" high dust barrier at the bottom. The decorative painted cabinet shall be 16 gauge steel. All painted surfaces shall be treated with a process which retards corrosion and promotes paint adhesion and finished with a baked-on semigloss enamel. Color to be selected by the Architect. All unpainted steel shall be galvanized.

  - All floor units shall have four leveling bolts.

  - The entire bottom of the unit must be enclosed. Access to the speed control shall be through the key operated locking access doors.

  - Recessed units shall be either fully or partially recessed and provided with a 1-1/2" wide framing. On all units the front panels shall be 16-gauge. The front panels shall have key operated locking access door to the speed control.

  - All units shall have piping end pockets. All ceiling units shall have safety hinged access panels that can be easily removed during installation.

- Coils

  - The heating coils shall provide specified capacities and not exceed the pressure drop and GPM listed in schedules. Coils shall be tested for 200 psi working pressure.

  - The coils shall be provided with a piping package as detailed on the drawings.

- Motor Speed Control
  - The unit shall have a unit mounted motor speed control switch, with High, Medium, Low and Auto positions on all models. On ceiling units, this control shall be separate and have a tamperproof wall plate for wall mounting.
- Motors, Blowers and Drives
  - Blowers shall be the centrifugal DWDI, forward curved type and provided with a NEMA 1 disconnect switch.
  - All units shall have permanent split capacitor direct drive motors. The motor and blower assembly shall be capable of being easily removed from the unit. When equipped with duct collars units shall have high static motors.
- Grilles
  - 12-gauge aluminum linear bar inlet and outlet grilles shall be provided on all floor models.
  - Recessed wall units shall be provided with integral louvers.
  - Recessed ceiling units shall be provided with adjustable outlet grilles and integral louvers for the inlet.
- Filters
  - All air shall be filtered by 1" replaceable filters. Provide 3 filters per unit.
- Cabinet unit shall have an NC34 level or lower at low speed.
- Controls
  - All recessed or floor mounted units shall be provided with integral thermostat. Concealed units shall be controlled by a wall mounted thermostat.
  - Unit mounted controls will be furnished by the ATC contractor, mounted and wired at the factory by the manufacturer of the cabinet unit heaters.

D3560 -FLEXIBLE PIPE CONNECTIONS

- Provide 125-lb working pressure flexible pipe connections with corrugated metal core and high-tensile tubular braided jacket. Provide units of bronze construction on copper piping and stainless-steel units with carbon steel ends on steel piping for 250° F. service. Flange or threaded ends to match connecting pipe.

D3570 -THERMOMETERS AND PRESSURE GAUGES

- Thermometers and pressure gauges shall be Trerice, Ashcroft, Taylor or approved equal complete with all required wells. Model numbers used are Trerice numbers.

- Thermometers shall be Model BX9, industrial thermometers, adjustable angle, 9" case. Thermometer ranges shall be 0 ºF to 100 ºF for use in chilled water piping.

- Pressure gauges shall be Model 500 X with 4-1/2" case. Ranges shall be 0 to 100 psi. Furnish a Model 865-gauge cock with each gauge.

D3580 -SLEEVES

- Furnish pipe sleeves for all pipes which pass through masonry floors and walls. Sleeves shall be Schedule 10 steel pipe. Sleeves shall be of the first possible size larger than the outside of the insulation jacket on covered piping and the first possible size larger than the outside of the piping on uncovered pipes.

- Sleeves shall be of sufficient length so as to be flush on either side of masonry walls, flush on underside of masonry floor and extend 2 inch above the finished floor.

D3590 -ESCUTCHEON PLATES

- Escutcheon plates shall be chromium plated, cast brass split type escutcheons.

D3600 -INSULATION

- Furnish all insulation required for the air-conditioning system, including:
  - Pipe insulation for:
    - Hot water supply (HWS), hot water return (HWR), including fittings, valves, strainers, etc.
    - Refrigerant Piping, Liquid and Suction Piping.
    - Condensate Drain.
  - Equipment insulation for:
    - Shot Feeder
    - Pump Casings
    - Air Separator
  - Duct insulation for:
    - All supply, return, fresh air and exhaust air to ERV ductwork.
    - Exhaust ductwork in unheated spaces.

- Piping, Interior: Insulate the piping, fittings, including the air separator, and

valve bodies with 6 PCF fiberglass with a 20 mil PVC jacket cemented. Provide PVC molded fittings at fittings and valve bodies. Insulation wall thickness shall be 1- 1/2" wall thickness for all HWS,R and HWS,R piping 1-1/4" and smaller, and 2" wall thickness for all piping 1-1/2" and larger.

- PVC jackets shall meet ASTM D1784, Class 14253-C have a flame spread of 25 or less, have a smoke developed rating of 50 or less. PVC jackets shall be joined and sealed by applying continuous PVC cement along all seams.

- NOTE: All new piping within the mechanical room shall be provided with color coded PVC jackets, color as selected by Engineer/Architect.

- Exterior pipe insulation shall be weatherproofed with Childers, Monville, Ferro Corp., or approved equal, aluminum jacketing. The jacketing shall be manufactured from T/3003 aluminum and shall have a factory attached moisture barrier continuously laminated across the full width of the jacketing. Jacket thickness shall be 0.016".

- Refrigerant Pipe and Condensate Drain Pipe: For refrigerant liquid piping provide 1" closed cell elastomeric insulation with heat transfer not to exceed 0.28 BTU/hr/ft2/ºF/inch.

- Duct Insulation, Interior: Insulate the ductwork with 2" thick, 3/4 lb. density fiberglass duct insulation, ASTM C533, maximum service temperature 450º F, with factory applied flame retardant PSK facing (UL labeled). Conditioned space duct insulation shall have a minimum insulation value of R-6 and unconditioned space duct insulation shall have a minimum insulation value of R-12.

- Exterior Ductwork: Ductwork to be installed outdoors shall be insulated R-12 min., 2" thick, 1.5 lb. Density polyolefin foam insulation. Joints to be sealed per manufacture's recommendation. Insulation shall then be wrapped with

  COMPOSITE MEMBRANE CONSISTING OF AN EMBOSSED UV-RESISTANT ALUMINUM OUTER LAYER LAMINATED TO A MULTI-PLY CROSS-
  LAMINATED POLYETHYLENE FILM. Exterior Ductwork shall be manufactured by Thermaduct or approved equal.

- Fiberglass Insulation

  - Fiberglass shall meet ASTMC 335 for thermal efficiency.

  - Ends of insulation shall be sealed with material as recommended by the manufacturer.

  - A complete moisture and vapor seal shall be provided wherever insulation terminates against metal hangers, anchors and other projections through insulation on cold surfaces.

  - Fire Hazard Rating: Insulation materials, coatings and other accessories shall individually have a fire hazard rating not to exceed 25 for flame spread and 50 for fuel contributed and smoke developed. Ratings shall be determined by U.L. "Test Method for Fire Hazard Classification of Building

Materials", No. 823 or NFPA No. 225 or ASTM E84.

- Identification: Furnish and apply piping identification to all piping, showing direction of flow approximately 30 foot - 0-inch O.C. on bottom, side or top of all pipes. Furnish and apply name or classification of service adjacent to each arrow. Piping identification shall be plastic cloth pipe markers.

D3610 -COOLING COIL

- Coils shall be designed for use with R-410A refrigerant and constructed of copper tubes with aluminum fins mechanically bonded to the tubes and galvanized steel end casings. Fin design shall be sine wave rippled.
- Coils shall have interlaced circuitry and shall be standard or 6 row high capacity.
- Coils shall be helium leak tested.
- Coils shall be furnished with a factory installed thermostatic expansion valves.
- Cabinet: Galvanized steel, phosphatized, and finished with an air-dry paint coating durable enough to withstand 1000 consecutive-hour salt spray application in accordance with standard ASTM B 117. Structural members shall be 14 gauge with access doors and removable panels of minimum 18-gauge steel. Roof panels shall be sloped to provide positive drainage of rain water / melting snow away from the cabinet. Insulation: Provide 1/2-inch-thick coated fiberglass internal liner.
- Coils shall be manufactured by Coilmaster, USA Coil or approved equal.

D3620 -AIR COOLED CONDENSING UNIT

- Furnish and install air cooled condensing units where shown on the drawings. Size, type, capacity and performance to be as scheduled on the drawings.
- Manufacturers: Daikin, Trane, Johnson or equal.
- Condenser Coil:
  - Non-ferrous construction with aluminum plate fins mechanically bonded to seamless copper tubes.
  - Circuited for subcooling.
- Casing:
  - Fully weatherproof, galvanized steel, zinc phosphatized, finished with baked enamel.
  - Provide with openings for power and refrigerant connections.
  - Removable panels for servicing.

- Condenser fans and motors:
  - Multiple, propeller type, each driven with its own motor, statically and dynamically balanced to operate at low tip speed for minimum noise and vibration.
  - Fan motors: heavy duty with inherent thermal protection providing built in protection against burnouts and single phasing, permanent lubricated, resilient mounted.
  - Fan guards: heavy gauge, close meshed steel wire with corrosion protection.
- Compressors:
  - Serviceable, semi-hermetic
  - External spring isolation
  - Automatically reversible oil pump
  - Located separate from the section with fans and coils.
- Controls:
  - Factory wired and located in a separate, fully enclosed and weatherproof control panel with key locked access door. Dual compartments to separate the safety from the power controls.
- Safety controls:
  - System "On-Off" switch
  - High pressure and low-pressure controls
  - Short cycle timer compressor overload
- Power panel devices:
  - Compressor motors contactors
  - Fan motors contractor
  - Fan motors circuit breakers
  - Power terminal blocks
  - Control circuit terminal blocks
  - Control circuit trans-

former D3630 -CURBS

- Curbs shall be specifically made for piece of equipment which it supports and shall be aluminum, welded with can't strips formed into the curb body, wooden

nailing strips, and rigid fiberglass insulation. Curbs for all roof mounted equipment shall be a minimum of 24" high to provide adequate space for transitions from equipment openings to ductwork through the roof openings.

- All roof top units shall be provided with an acoustical curb with SPRING vibration control.

- All curbs shall be pitched according to roof slope to allow for equipment to be installed level. Contractor to field measure roof slope before fabricating curb. See Architectural drawings for roof slope.

D3640 -STRAINERS

- Provide a "Y" type full size strainer as indicated on the Drawings.
- An approved dirt blowout connection shall be made to each strainer, with 1-inch Jenkins Figure 372 and Figure 658 cap and chain; the valve located six inches to twelve inches below the strainer. In the case of strainers under full water pressure, the blowout connection shall terminate at a point where there will be no risk of flooding or damage.
- Strainers 2" diameter and smaller shall have screwed ends. Strainers 2-1/2" diameter and larger shall have flanged ends.
- Strainers 2" and smaller shall be full size, bronze, "Y" pattern: Tate Temco Figure IY, Spirax Sarco, Mueller or approved equal.
- Strainers 2-1/2" or larger shall be cast steel body, "Y" type; Tate Temco figure IY, Spirex Sarco, Mueller or approved equal, 150 psi rating.
- Total open area of basket perforations shall be at least three times the inside area of pipes.
- Strainer baskets shall be stainless steel with 1/16" perforations (up to 2" size) and 1/8“perforations (2-1/2" and larger).

D3650 -ROOF EXHAUST FANS

- All fans shall be furnished and installed with all options and accessories as scheduled, specified and required for proper operation.
- Fans shall be as manufactured by Greenheck, Cook, Mid-City or approved equal. Fans shall be of the capacity and electrical configuration as scheduled.
- General
  - Downblast fan shall be for roof mounted applications
  - Maximum continuous operating temperature is 180 ° F (82.2 °C)
  - Each fan shall bear a permanently affixed manufacture's engraved metal nameplate containing the model number and individual serial number.

- Fan Wheel
  - Constructed of aluminum
  - Non-overloading, backward inclined centrifugal
  - Statically and dynamically balanced in accordance to AMCA Standard 204-05
  - The wheel cone and fan inlet will be matched and shall have precise running tolerances for maximum performance and operating efficiency.
- Electronically Commutated Motor
  - Motor enclosures: Open type
  - Motor to be a DC electronic commutation type motor (ECM) specifically designed for fan applications. AC induction type motors are not acceptable.
  - Motors are permanently lubricated, heavy duty ball bearing type to match with the fan load and pre-wired to the specific voltage and phase.
  - Internal motor circuitry to convert AC power supplied to the fan to DC power to operate the motor.
  - Motor shall be speed controllable down to 20% of full speed (80% turndown). Speed shall be controlled by a 0-10 VDC signal.
  - Motor shall be a minimum of 85% efficient at all speeds.
- Motor Housing
  - Motor cover, shroud, curb cap, and lower wind band shall be constructed of heavy gauge aluminum
  - Shroud shall have an integral rolled bead for extra strength
  - Shroud shall be drawn from a disc and direct air downward
  - Lower wind band shall have a formed edge for added strength
  - Motor cover shall be drawn from a disc
  - All housing components shall have final thicknesses equal to or greater than preformed thickness.
  - Curb cap shall have pre-punched mounting holes to ensure correct attachment
  - Rigid internal support structure
  - Leak proof

- Housing Supports and Drive Frame:
  - Drive frame assemblies shall be constructed of heavy gauge steel and mounted on vibration isolators
- Vibration Isolation:
  - Rubber isolators, sized to match weight of the fan
- Disconnect Switches:
  - NEMA 1 rated
  - Positive electrical shut-off
  - Wired from fan motor to junction box installed within motor compartment
- Options/Accessories:
  - Provide aluminum birdscreen.
  - Curb
  - Provide aluminum hinges to allow for tilt away access to wheel and ductwork for inspection and cleaning. Hinges and restraint cable shall be mounted to a base (sleeve)

D3660 -VIBRATION ISOLATION

- General
  - All vibration isolators shall be the product of a single approved manufacturer.
  - Model numbers hereinafter specified are from Mason Industries. Other equivalent units by Consolidated Kinetics, Vibration Mountings and Controls or approved equal are acceptable.
  - All vibration isolators for mechanical equipment hung in ceiling shall be selected in accordance with the weight distribution of the equipment to be served so as to produce a uniform deflection. Deflections shall be as hereinbefore specified.
  - Submittals shall include all spring deflections, spring diameters, scale drawings, attachment details, and rated capacity indicating adequacy for each piece of equipment served.

D3670 -WATER TREATMENT

- Provide treatment systems and service for water systems as shown on drawings specified herein.

- Provide piping necessary for complete system.
- Closed Loop Water Systems (Hot Water)
- A single liquid corrosion inhibitor shall be provided. Product shall be nitrite borate-based blend. Control limits shall be 800-1,200 parts be million sodium nitrite. Treatment shall be Barclay Inhibitor N-101.
- Flush and clean hot water-heating system with Barclay Liquid Flushout or approved equal after completion of installation. After cleaning, add nitrite Inhibitor N-101 or approved equal to 800-1,200 ppm maximum. Submit written report indicating the systems have been thoroughly cleaned and charged with corrosion inhibitor.
- Apply chemical cleaning operation to interior of systems to remove foreign substances after completion of installation.

D3680 -VARIABLE FREQUENCY DRIVES

- Description: Provide combination VFD/disconnect. Each VFD shall consist of a pulse width modulated (PWM) inverter for use on a premium efficiency NEMA Design B induction motor. The drive shall be designed specifically for variable torque applications. The drive manufacturer must furnish for approval by the Engineer, the local service location, the service response time and availability of trained local service engineers. VFD shall be provided with manual and maintenance bypass.
- Standards
  - Institute of Electrical and Electronic Engineers (IEEE)
    - Standard 519-1992, IEEE Guide for Harmonic Content and Control.
  - Underwriters Laboratories
    - UL 508
  - National Electrical Manufacturer's Association (NEMA)
    - ISC 6, Enclosures for Industrial Controls and Systems
    - IEC 801-2, 801-4, 255-4
- Testing
  - All printed circuit boards shall be completely tested and burned in before being assembled into the completed VFD. The VFD shall then be subjected to a preliminary functional test, minimum eight hour burn in, and computerized final test. The burn in shall be at 104 ºF (40 ºC) at full rated load, or cycled load. Drive input power shall be continuously cycled for maximum stress and thermal variation.

- Failure Analysis
  - VFD manufacturer shall have an analysis laboratory to evaluate the failure of any component. The failure analysis lab shall allow the manufacturer to perform complete electrical testing, x-ray components, and decap or de-laminate components and analyze failures within the component.
- Warranty
  - Warrant and obtain from the manufacturer its warranty that all variable frequency drives will be free from defects and workmanship for a period of two (2) years from the date of certified startup. Said manufacturer's warranty shall be in a form acceptable to and for the benefit of the Owner and shall be submitted as a condition of final payment. Repair or replace, at the sole option of and at no cost to the Owner, any unit found to be defective within said warranty period. Such repair or replacement shall include the cost of removal and reinstallation.
- The VFD manufacturer shall have the following available:
  - Service Engineer.
  - Training/service school.
  - 24-hour telephone service.
  - Recommended spare parts list.
  - Training: the manufacturer shall provide four hours of in-house training.
- VFD systems shall be microprocessor based, fully transistorized with a conservatively rated 3 phase, full wave diode bridge input and a PWM sine-coded output waveform. The input diode bridge shall offer complete immunity against voltage dips, line noise and harmonics. The output transistors must be of the IGBT-type (Insulated Gate Bipolar Transistor) to facilitate noiseless motor operation. The VFD's shall be tested and rated for a minimum of 20 years mean Time Between Failure (MTBF). Provide manufacturers typical test results or calculations with submittal to verify MTBF.
- To minimize electrical and acoustical noise, and to eliminate low speed cogging, a minimum switching frequency of 15 kHz shall be used for drives rated 1-75 HP at 460VAC. The VFD shall not "cog" at frequencies above 1.5 Hz. There shall be no sudden and associated acoustical noise shifts as the output frequency is varied between 1.5-60 Hz.
- Each VFD shall be solid state, with a Pulse Width Modulated (PWM) output waveform (VVI, six-step, and current source drives will not be acceptable). Each VFD shall employ a full wave rectifier (to prevent input line notching), minimum

  3% DC line reactor capacitors, and Insulated Gate Bipolar Transistors (IGBT's) as the output switching device (SCR's, GTO's and Darlington transistors will not be acceptable).

- Drive efficiency: 97% or better at full speed and full load.
- Fundamental power factor: 0.95 at all speeds and loads.
- Input: Reference drawings for voltage requirements.
- Output: Reference drawings for voltage requirements.
- Environmental operating conditions: 0-40ºC at 3 kHz switching frequency, 0-3300 feet above sea level, less than 95% humidify, non-condensing.
- Enclosure: NEMA 1 enclosures shall be provided.
- Standard features:
    - All VFD's shall have the same customer interface, including digital display, keypad and customer connections; regardless of horsepower rating. The keypad is to be used for local control (start/stop, forward/reverse, and speed adjust), for setting all parameters, and for stepping through the displays and menus.
    - The VFD shall give the user the option of either (1) displaying a fault, or (2) running at a programmable preset speed if the input reference (2-10 V) is lost, as selected by the user.
    - Display: plain English digital display (code numbers are not acceptable), a 40-character (2 line 16 characters/line) backlit LCD display. All set up parameters, indications, faults, warnings and other information must be displayed in words to allow the user to understand what is being displayed without the use of a manual or cross reference table.
    - The VFD shall have the ability to automatically restart after an overcurrent, overvoltage, undervoltage, or loss of input signal protective trip. The number of restart attempts, trial time, and time between reset attempts shall be programmable.
    - The VFD shall be capable of starting into a rotating load (forward or reverse) and accelerate or decelerate to set point without safety tripping or component damage (flying start).
    - The VFD shall be equipped with an automatic extended power loss ride-through circuit which will utilize the inertia of the load to keep the drive powered. Minimum power loss ride-through shall be one cycle, based on full load and no inertia. Removing power from the motor is not an acceptable method of increasing power loss ride-through.
    - The customer terminal strip shall be isolated from the line and ground.
    - Pre-wired three position Hand-Off-Auto switch and speed potentiometer located on exterior side of motor control center door. In the "Hand" position, the VFD will be started and the speed will be controlled from the speed

potentiometer or through a direct keypad command. In the "Off" position, the VFD will be stopped. In the "Auto" position, the VFD will start via an external contact closure and its speed will be controlled via an external speed reference.

- Current limit circuits: the slow current regulation limit shall be adjustable to 110% (minimum) of the variable torque current rating. This adjustment shall be made via the keypad, and shall be displayed in actual amps, and not as percent of full load.
- Drive overload rating: 110% of the variable torque current rating for one minute every 10 minutes, and 140% of its H torque current rating for two seconds every 15 seconds.
- The VFD shall have input line fuses located within the enclosure.
- The VFD shall be optimized for a carrier frequency up to 16 Hz to reduce motor noise. The carrier frequency shall be adjustable by the startup engineer.
- The VFD shall have a manual speed potentiometer in addition to using the keypad as a means of controlling speed manually.
- The VFD shall have a minimum 3% DC Line Reactor to reduce the harmonics to the power line (per GSE specifications).

- Adjustments
  - At least three programmable critical frequency lockout ranges to prevent the VFD from continuously operating at an unstable speed.
  - PI set point controller shall be standard in the drive, allowing a pressure or flow signal to be connected to the VFD, using the microprocessor in the VFD for the closed loop control.
  - Two programmable analog inputs shall accept a current or voltage signal for speed reference or for reference and actual signals for PI controller. Analog inputs shall include a filter; programmable from 0.01-10 seconds to remove any oscillation in the input signal. The minimum and maximum values (gain and offset) shall be adjustable within the range of 0-20 mA and 0-10 volts. Additionally, the reference must be able to be scaled so that maximum reference can represent a frequency less than 60 Hz, without lowering the drive maximum frequency below 60 Hz.
  - Six programmable digital inputs: 24 VDC, 120 VAC, contact closure.
  - Two programmable analog outputs: 0(4) -20 mA, 500-ohm maximum load, proportional to Frequency, Motor Speed, Output Voltage, Output Current, Motor Torque, Motor Power, DC Bus voltage, or Active Reference.
  - Three digital relay outputs, rated for maximum switching current 8 amps at 24 VDC and 0.4 amps at 250 VAC; maximum voltage 300 VDC and 250 VAC; continuous current rating 2 amps RMS. Outputs must be true form C type contacts; open collector outputs are not acceptable.

- Seven programmable preset speeds.
- Two independently adjustable acceleration and deceleration ramps, with ramp times adjustable from 1-600 seconds.
- The VFD shall ramp or coast to a stop, as selected by the user.

- Operating information displays, in complete English words (alpha-numeric codes will not be acceptable)
  - Output Frequency
  - Motor Speed (RPM, % or Engineering units)
  - Motor Current
  - Calculated Motor Torque
  - Calculated Motor Power
  - DC Bus Voltage
  - Output Voltage
  - Heat Sink Temperature (ºF or ºC)
  - Elapsed Time Meter
  - Analog Input Values
  - Keypad Reference Values
- The adjustable speed drive shall have, as a minimum, the following protective features:
  - Ground fault protection.
  - Thermal motor overload relay (if inverter bypass option is used).
  - Current limit adjustable 10-120%.
  - Current limited stall prevention during acceleration, deceleration, and run conditions.
  - Automatic restart after momentary power loss or momentary overvoltage. The drive shall not restart into faults other than overvoltage, undervoltage, or overcurrent due to acceleration rate set too fast, because other faults, such as an overcurrent due to a blown transistor or a short circuit on the output, could cause damage to the inverter.
  - Fault indicators shall indicate the following fault conditions. Faults should be displayed by flashing an LED display on the front panel of the inverter. When a fault occurs, the drive shall have built in diagnostic functions that assist in determining the cause and source of the fault. The drive shall also

indicate the level of current and voltage and the frequency at the time of the fault.

- □ Overcurrent during acceleration
- □ Overcurrent during deceleration
- □ Overcurrent while running
- □ Overcurrent on output
- □ Overcurrent detected at startup

- In the case of a protective trip, the drive shall stop and announce the fault condition in complete words (alpha-numeric codes are not acceptable).
- Overcurrent trip limit: 180% instantaneous (225% RMS) of the VFD's variable torque current rating.
- Overvoltage trip limit: 130% of rated voltage.
- Undervoltage trip limit: 65% of rated voltage.
- Over temperature (heat sink): 158ºF (70ºC).
- Adaptable Electronic Motor Overload (I^2t). The Electronic Motor Overload protection shall protect the motor based on speed, load curve, and external fan parameter. Circuits which are not speed dependent are unacceptable.

- Speed Command Input shall be via:
  - Keypad.
  - Two analog inputs, each capable of accepting a 0-20 mA, 4-20 mA, 0-10 V, 2-10 V signal. Input shall be isolated from ground, and programmable via the keypad for different uses. Analog inputs shall have a programmable filter to remove any oscillation of the reference signal. The filter shall be adjustable from 0.01-10 seconds. The analog input should be able to be inverted, so that minimum reference corresponds to maximum speed, and maximum reference corresponds to minimum speed. The minimum and maximum values (gain and offset) shall be adjustable within the range of 0-20 mA and 0-10 volts.
- Serial Communications
  - The VFD shall be able to communicate with PLC's, DCS's and DDC's.
- Accessories furnished and mounted by the drive manufacturer.
  - Customer Interlock Terminal Strip: provide a separate terminal strip for connection of freeze, fire and smoke contacts and external start command. All external interlocks and start/stop contacts shall remain fully functional whether the drive is in Hand, Off or Auto.

- All wires to be individually numbered at both ends for ease of troubleshooting.
- Door interlocked thermal magnetic circuit breaker which will disconnect all input power from the drive and all internally mounted options. The disconnect handle shall be thru-the-door type, and be padlockable in the "Off" position.
- Packaged bypass control including bypass contactor and input and output contactors that will totally isolate VFD from 3-phase AC power via input and output contactors.

D3690 -ENERGY RECOVERY VENTILATOR

- Basis-of-Design Product: Subject to compliance with requirements, provide product indicated on Drawings or comparable product by one of the following:
  - Greenheck, Valent, Munters,
  - No substitutions
- Unit Construction:
  - Base: Manufacturer's standard base shall be constructed of minimum 10 gage galvanized steel with 16 gage integral floor pan. Floor pan shall be insulated with minimum 1/4" closed cell neoprene liner. All floor seams shall have a raised rib joint. Penetrations through the floor shall have a minimum 3/8" raised rib around each opening. Base shall have a minimum 4" overhang over the top of a roof curb to prevent water infiltration.
  - Panels: Manufacturer's standard casing shall be constructed of minimum 2- inch, foam-injected, double-wall panels.
    - Individual panels shall be constructed so that there is no metal-to-metal contact between the interior and exterior sheet metal of each panel.
    - Interior side of panel shall be 22 gage G-90 galvanized steel. Exterior side of panel shall be 22 gage pre-painted steel rated for 1000 hours of salt spray exposure in accordance with ASTM B117 and ASTM D1654.
    - Insulation shall be 2 lb/ft3 injected foam insulation with a minimum R-value of 12. Foam sheet or fiberglass insulation are not acceptable due to reduced durability of panel and increased chance for rust forming between the panels. Insulation water absorption must be no more than
      0.038 lb/ft per ASTM D2842 and show "no growth" per ASTM G21 biocide testing. Interior sheet metal shall encase insulation so that it is not exposed to the airstream.
  - Access doors shall be provided for access to all internal components requiring regular maintenance or inspection. Access door construction and materials shall be identical to unit casing. Access doors shall have stain-

less steel hinges and a minimum of two quarter-turn compression latches with adjustable catches. Access doors shall be sealed with a full-perimeter D- shaped gasket constructed of EPDM sponge rubber.

- Roof shall be pitched away from access doors and include a minimum ½" overhang around the perimeter of the unit.
- Outdoor Air Inlet: Outdoor units shall be provided with a factory provided, field-assembled weather hood with ½" aluminum washable filters on the outdoor air inlet.
- Unit return shall be up flow
- Unit discharge shall be down flow
- Unit shall include lifting eyes on top of unit for use during rigging.
- Motorized dampers – Outside Air and Return Air
  - Frame shall be constructed of a 16-gage galvanized steel hat-channel.
  - Blades shall be constructed of 16-gage galvanized steel strengthened by three longitudinal 1 inch deep "vee" grooves.
  - Blades shall be symmetrical relative to its axle pivot point.
  - Axle bearings shall be synthetic sleeve-type and rotate inside extruded holes in the damper frame.
  - Blade seals shall be extruded vinyl permanently bonded to the appropriate blade edges.
  - Frame shall include flexible stainless-steel compression-type jamb seals.
  - Modulating spring-return actuators shall be provided by the factory, installed on the damper, and wired to the control center. Each damper shall have a dedicated actuator. Single actuators with gear trains are not acceptable.
  - Damper leakage shall be no more than 3 cfm/sq. ft. at 1 in.wg static pressure.
  - Exhaust: Gravity backdraft damper with internal bird screen.

- Heat Recovery Device: Enthalpic Plate – Core heat exchanger
  - Energy recovery shall be an integral part of unit from the manufacturer. No field assembly, ducting, or wiring shall be required with the energy recovery option.
  - Latent and sensible energy transfer shall be provided through a flat-plate heat exchanger core, with a minimum total energy recovery effectiveness of 50% tested and certified to AHRI 1060-2005. No additional moving parts

or drive mechanisms shall be required to enable energy recovery.

- The heat exchanger frame shall be constructed with extruded 6063 aluminum rails.
- The heat exchanger core shall be constructed of a polymer membrane with a 0% exhaust air transfer ratio (EATR) tested and certified to AHRI 1060-2005.
- The core shall be capable of handling regular contact with liquid water from either condensation or periodic cleaning while maintaining both the energy recovery effectiveness and 0% EATR rating.
- The core shall be mold and bacteria resistance tested to ISO 846a and 846c with a rating of 0 for both.
- The core shall be freeze tolerance tested to 40 freeze thaw cycles from -4°F to +68°F while maintaining both the energy recovery effectiveness and 0%
  EATR rating
- The heat exchanger core shall comply with UL 723 and have a flame spread index of 25 or less and a smoke index of 50 or less.
- Stainless steel drain pans shall be provided under entire heat exchanger to catch and drain condensation or water used in periodic cleaning.
- Energy recovery media shall be accessible through a 2" thick, foam-injected, double-wall, hinged access door with quarter-turn latches.
- A face and bypass damper shall be provided in parallel with the media for economizer and frost control.
- An electric heater shall be provided upstream of the energy recovery media in the outdoor air stream for frost control.

- DX Cooling Coil:
  - Coil shall be rated in accordance to AHRI standards, designed to withstand 250 psig working pressure at 300 degrees F, and pressure tested to 600 psig.
  - Coil shall be a minimum of 4 rows deep with maximum fin density of 10 fins per inch.
  - Refrigeration systems with more than one circuit shall have interlaced evaporator coils.
  - Coil casing shall be constructed of 16 gage galvanized steel.
  - Coil tubes shall be constructed of 1/2" diameter, 0.016" thick seamless copper tubing.

- Coil fins shall be constructed of 0.0060" thick aluminum.
- Drain pan
  - Drain pan shall be constructed of a minimum of 18 gage 201 stainless steel.
  - Drain pan shall be double-sloped to ensure condensate removal from unit.
  - Drain pan shall extend a minimum of 8” past the evaporator coil to ensure condensate retention.

- Refrigeration – Air Cooled DX:
  - Unit shall be provided with factory piped, charged, and tested packaged air- cooled direct expansion refrigeration system.
  - Refrigeration systems 10 nominal tons and above shall be equipped with two stages of capacity control, each stage on an independent refrigerant circuit.
  - Refrigeration systems 30 nominal tons and above shall be equipped with four stages of capacity control, two stages per independent circuit.
  - Refrigeration system shall be provided with thermal expansion valve (TXV) incorporating adjustable superheat.

- Compressors
  - Compressors shall be hermetic scroll type and include the following items:
    - Suction and discharge isolation valves.
    - Reverse rotation protection.
    - Oil level adjustment.
    - Oil filter.
    - Filter drier
    - Short cycling control.
    - High- and low-pressure limits.
    - Crankcase heaters.
  - Compressors shall be installed in a separate compartment, above the unit floor, and isolated from the surrounding environment by double wall foam injected panels and access doors.
  - Compressors shall be installed using manufacturer's recommended rubber vibration isolators.

- Capacity control shall be provided through the use of a single Digital Scroll™ compressor. Additional compressors, if required, shall be fixed stage scroll compressors

- Hot Gas Reheat:
  - Hot-gas reheat coil shall be separated from the evaporator coil by a minimum of 6" in the direction of airflow to prevent the re-evaporation of condensate, provide room for coil cleaning, and allow control system to monitor evaporator coil leaving dew point temperature.
  - Coil shall be rated in accordance to AHRI standards, designed to withstand 250 psig working pressure at 300 degrees F, and pressure tested to 600 psig.
  - Coil casing shall be constructed of 16 gage galvanized steel.
  - Coil tubes shall be constructed of 5/16" diameter, 0.012" thick seamless copper tubing.
  - Coil fins shall be constructed of 0.0060" thick aluminum fins.
  - Hot-gas reheat shall be controlled through a factory-supplied and controlled modulating 3-way valve.

- Air Cooled Condenser:
  - Air cooled condenser coil shall be unit mounted.
  - Provide condenser coils with galvanized casing, seamless copper tubes, and aluminum fins.
  - Coil shall be rated in accordance to AHRI standards, designed to withstand 250 psig working pressure at 300 degrees F, and pressure tested to 600 psig.
  - Coil casing shall be constructed of 16 gage galvanized steel.
  - Coil tubes shall be constructed of 5/16" diameter, 0.012" thick seamless copper tubing.
  - Coil fins shall be constructed of 0.0060" thick aluminum fins.
  - Condenser coils shall be mounted at a minimum 30-degree angle from vertical to help prevent hail damage.

- Condensing Fans – Low ambient and Low sound:
  - Condensing section shall be equipped with high-performance 1200 rpm condensing fans.
  - Condensing fan blades shall be constructed out of a polymer, sickle-shaped blades with serrated trailing edges for sound reduction. Individual

fans shall be capable of an Lw(A) of 75 dB as tested to ISO 5801.

- Condensing fan motor shall be electrically-commutated and capable of modulation without the need of an external variable frequency drive.
- All condensing fans shall modulate in unison to maintain the head pressure set point

- Direct Drive Supply and Exhaust Airflow Blowers:
  - Fan assemblies shall be direct-drive without the use of belts or adjustable sheaves.
  - A variable frequency drive (VFD) shall be provided for each fan section. VFD shall be mounted, wired, and programmed by the equipment manufacturer. VFD shall be located in an enclosed compartment outside of the supply or exhaust air stream.
  - Fan wheel shall be tested in accordance to AMCA 210. Fan speed shall not exceed 2400 RPM.
  - Fans may be full width or partial width. Fans modified to partial width through the use of banding or other blade reduction method are not acceptable.
  - Fans shall be mounted on minimum 1” tall neoprene isolators.
  - Fan motor shall be VFD rated, ODP type, EPACT compliant, and shall be of premium efficiency (PE).
- Hot Water Heating Coil
- Filters:
  - Outdoor air intake hood filters
    - Filter rack shall accommodate 1" media.
    - Manufacturer shall provide 1 set of 1" aluminum filter media.
    - Filter sections shall be accessible from outside the unit and located in the outdoor air intake hood.
    - Outdoor air filter rack shall accommodate factory-provided 2" aluminum
    - Filter sections shall be accessible through a 2" foam-injected, double-wall, hinged access door with quarter-turn latches.
  - Return air filters
    - Return air filter rack shall accommodate factory-provided 2" aluminum
    - Filter sections shall be accessible through a 2" thick, foam-injected, double-wall, hinged access door with quarter-turn latches.

- Supply air filters
  - Supply air filter rack shall accommodate factory-provided 2" MERV 8 filters.
  - Filter sections shall be accessible through a 2" thick, foam-injected, double-wall, hinged access door with quarter-turn latches.
  - Filter section shall include magnehelic gauge and/or dirty filter pressure switch.

- Electrical:
  - Unit shall be constructed with an integral electrical and control center isolated from supply airflow, exhaust airflow, compressors, and heating elements. The control center shall control all aspects of the unit operation. VFDs with overload protection shall be provided for each fan bank.
  - Units shall be wired according to NEC and listed per ETL. ETL listing shall cover all components of the ventilator and not be limited to the control panel. All major electrical components shall be UL or ETL listed.
  - Unit shall have a single point of connection with integral unit mounted disconnect. Panel shall have an SCCR rating of 5 kV.
  - Units shall be factory wired with a single point power connection.
  - Unit shall be provided with phase and brown out protection which shuts down all motors in the unit if the electrical phases are more than 7% out of balance on voltage, the voltage is more than 7% under design voltage, or on phase reversal.
  - The following items shall be provided and wired within the control center by the factory:
    - Non-fused disconnect.
    - Sub-circuit fusing.
    - Low voltage transformers.
    - Controls as specified in this section.
    - Control circuit fusing.
    - Terminal block.
    - Supply and Exhaust Fan motor Variable Frequency Drives (VFDs).
    - Electrical panel must house all high voltage components such as terminal blocks, variable frequency drives, and fuse blocks.
    - All electrical power and controls wiring shall run in chase located be-

tween unit ceiling and roof to minimize interior wall penetrations and allow for ease of access.

- Options
  - Control panel shall include a factory supplied and mounted 115V GFCI convenience outlet receptacle with a 12A circuit breaker. Outlet shall be powered by others in the field.
  - Unit shall include a factory supplied, mounted, and wired electric heating element in the control panel to maintain a minimum of 0F in the panel.
  - Controls:
  - Units shall include factory supplied, mounted, wired, and tested stand-alone microprocessor controls.
  - Microprocessor controller shall be factory-programmed for discharge air control and use an internal 7-day time clock.
  - Microprocessor controller shall include local liquid crystal display (LCD) for user interface. Microprocessor controller remote LCD shall be mounted in a weather-proof enclosure and accessible without exposing the operator to high voltage wiring or having to turn off or circumvent the main disconnect.
  - The following sensors shall be factory supplied, mounted, and wired inside the unit:
  - Outdoor air humidity sensor.
  - Outdoor air temperature sensor.
  - Evaporator coil leaving air temperature sensor.
  - The following devices shall be factory-supplied for field installation and wiring:
  - Supply air temp temperature sensor.
- Microprocessor controller shall include BACnet IP communications for building management system interface.
- Microprocessor controller shall include a Web UI interface for remote web-based access of all unit digital and analog inputs and outputs. Web UI shall include unit scheduling, point trending capabilities, and an alarm history.
- Roof Curb.
  - Roof Curb: See curb spec section.
- Factory Authorized Testing and Start Up

- □ Unit shall be thoroughly run tested prior to shipment from the factory.
- □ Factory run test report shall be provided at the request of the engineer, contractor, or owner.
- □ est report shall be provided prior to unit startup and available from the factory upon request.

D3700 -AUTOMATIC TEMPERATURE CONTROL

- Manufacturers:
  - Automatic Logic
  - Johnson Controls Company
  - Siemens
  - Or equal.
- Furnish and install all control components for a new Direct Digital of automatic temperature controls for each new sequence of operation as indicated. This

  direct digital system of automatic temperature control shall be complete in all respects including all labor, materials, equipment and services necessary and shall be installed by personnel employed by the ATC Contractor. All new controls shall be web access platform through interconnection with the building IT; the contractor shall be provided with an IP address by the building IT and interconnect through communication cable to location designated by the Awarding Authority.

  - Direct Digital automatic temperature and energy monitoring and control (DDC) system using field programmable micro-processor-based units (Application Specific Controllers or ASC's).
  - All control equipment to be fully proportioning, and the latest state of the art in manufacture and design.
  - The control to be installed by competent control mechanics and electricians under the supervision of the manufacturer of the control equipment. All control equipment to be the product of one (1) manufacturer and all ATC components to be capable of interfacing with the HVAC equipment. The factory trained control contractor must maintain adequate staff and offer standard services to fully support the Owner in the timely maintenance, repair, and operation of the control system. Contractors who do not maintain such staff and offer services or who must develop same for this project are not acceptable. Bids from franchised dealers as well as wholesale, distributor or representative type ATC contractors, or others whose principal business is not manufacture, installation and service of temperature control systems will not be acceptable.
  - The Automatic Temperature Control (ATC) Contractor. Contractor shall

have a large support, technical and engineering staff on call 24 hours a day with a minimum of 20 technicians and 5 support engineers. This staff shall be based within 50 miles of the Town. The ATC Contractor must support all hardware and software regardless of age. The ATC Contractor shall be "forward-backward" supportive. The software shall be extremely user friendly. Changes in programming must be made without having to rewrite the programming. Local branch/company/division must offer onsite and offsite computer operations training.

- The operator interface shall be through a Web based browser to a web hosted secure site; any operator shall be able to access the individual building energy management system through any computer connected to the internet and a secure password.

- Scope:
  - The control system provided to consist of all microprocessors, software, database entry, modem, transformers, transducers, relays, thermostats, dampers, damper operators, valves, valve operators and all other necessary control components, along with a complete system, interlocking and communication wiring/cabling to fill the intent of the specification and provide for a complete and operable system.
  - Alarms, where applicable, and all interlocking wiring required to be provided by the ATC contractor.
  - The ATC contractor to review and study all HVAC and Electrical drawings and entire specification to familiarize himself with the equipment and system operation and to verify the quantities and types of dampers, operators, alarms, etc., he has to provide.
  - All interlocking wiring and installation of all required control devices associated with mechanical equipment etc., to be provided by the ATC contractor. Close coordination to be exercised between the ATC contractor and the HVAC contractor and equipment manufacturers so that installation will be provided in a manner to result in fully operable systems, as intended in these specifications.
  - The ATC contractor shall provide all power wiring, conduit, etc. for all his components requiring such. Provide power wiring from breakers in electric panels to ATC panels. All wiring to be done in strict conformance with D50.
  - The ATC shall provide communication wiring from boiler room ATC control panel to building network panel; Awarding Authority to provide IP address and final termination into their networks.
  - The ATC contractor shall be on site and assist the commissioning agent with the commissioning of the system.

- Incidental Work By Others:
  - The following incidental work to be furnished by the designated contractor under the supervision of the ATC contractor:

- The HVAC contractor to coordinate required work with ATC and, without limiting the generality thereof, the work he is to perform for ATC to include the following:
- Install automatic valves, sensor wells and other similar equipment that are specified to be supplied by the ATC contractor.
- Furnish and install all necessary valved pressure taps, water, drain and overflow connections and piping.
- Provide, on magnetic starters furnished, all necessary auxiliary contacts, with buttons and switches in required configurations.
- Provide access doors or other approved means of access through ceiling and walls for service to control equipment.

- Electric Wiring:
  - All electric power wiring, wiring connections and all interlocking required for the installation of the temperature control system, as herein specified. Power to valves and actuators to be by the ATC contractor.
  - All wiring and wiring methods to comply with the requirements of the Electrical Section of the specifications.
  - Provide, on magnetic starters, all necessary auxiliary contacts, with buttons and switches in required configurations.
- Submittal Brochure:
  - The following to be submitted for Approval:
    - Control drawings with detailed piping and wiring diagrams, including bill of material and a written sequence of operation for each system controlled by the ATC contractor. Diagrams to include individual wiring and tubing marking designation, interlock details and wiring details of interfaces to other manufacturers system.
    - A symbols key and an overall LAN Architecture Diagram.
    - Panel layouts and nameplate lists for all local and central panels.
    - Valve and damper schedules showing size, configuration, capacity and location of all equipment.
    - Data sheets for all control system components.
    - Control strategies (software flow charts) must be included within the second ATC shop drawing submittal. The listing of each strategy must be in English and demonstrate the desired ATC sequence of operation. Submittal must be complete with proposed schedules, listing of setpoints and end device point listing and addresses.
    - Auto-Cad R-2011 compatible as-built drawings (DVD disks).

- Upon project completion, submit operation and maintenance manuals, consisting of the following:
  - Index sheet, listing contents in alphabetical order
  - Manufacturer's equipment parts list of all functional components of the system, Auto-CAD disk of system schematics, including wiring diagrams
  - Description of sequence of operations
  - As-Built interconnection wiring diagrams
  - Operator's Manual
  - Trunk cable schematic showing remote electronic panel locations, and all trunk data
  - List of connected data points, including panels to which they are connected and input device (ionization detector, thermostat, etc.)
  - Conduit routing diagrams

- Guarantee:
  - In addition to the guarantee requirements of the Contract and General Conditions, the Contractor shall obtain in the name of the Owner the standard manufacturer's guarantee of all materials furnished under this

    Section where such guarantees are offered in the manufacturer's published product data. These guarantees are in addition to, and not in lieu of, other liabilities which the Contractor may have by law or other provisions of the Contract Documents.

  - Upon completion of the installation, the ATC contractor shall submit to the Owner an agreement to provide the necessary programmed maintenance, to keep the various control systems in proper working condition, for a period of one (1) year commencing at final project acceptance. Additionally, this contractor to submit to the owner its standard agreement to support the system operation. This service must include operators support, application support, remote diagnostic support (via remote, on-line telephone support services) as well as database management support. This service shall be available 365 days per year, 24 hours a day.

  - The programmed maintenance agreement shall fully describe the maintenance work to be performed and shall advise as to the cost of this work prior to awarding of Contract.

- Instruction and Adjustment:
  - Upon completion of the project, the ATC contractor to:

- Fine-tune and "debug" all software control loops, routines, programs and sequences of control associated with the control system supplied.

- Completely adjust and make ready for use, all transmitters, relays, damper operators, valves, etc., provided under this Section. This contractor shall furnish copies of complete, detailed, calibrating checkout and commissionary documentation for each controller.

  - Documentation to list each procedure and shall be signed by the control specialist performing the service.

- The ATC contractor shall provide an on-site training program for the Owner's staff in the operation and use of the control system. Training to include the following:

  - Include 4 hours of classroom and hands-on training. This segment to instruct Owner's personnel in the system configuration, component characteristics, control strategy on each controlled system and all requirements for daily operation and use of the system. This segment to give the Owner's representative a working proficiency in day-to-day operational requirements (i.e., system monitoring, alarm acknowledgment, HVAC system troubleshooting techniques, setpoint and time schedule adjustments, manual override, etc.).

  - All training to take place at the site and at times mutually agreed to between the ATC contractor and the Owner. The ATC contractor to provide to the Owner's designated representative, at least three (3) weeks before each segment, a course syllabus outline and schedule. The ATC contractor to provide all training material, reference material and training aids, as required, all as part of his Contract cost.

  - Training to be recorded by the ATC Contractor; two DVD copies of the training session to provide to the owner as part of the ATC closeout documentation.

- Communication:

  - Control products, communication media, connectors, repeaters, hubs, and routers shall comprise a BACnet internetwork. Controller and operator interface communication shall conform to ASHRAE/ANSI Standard 135-2001, BACnet.

  - Each controller shall have a communication port for temporary connection to a laptop computer or other operator interface. Connection shall support memory downloads and other commissioning and troubleshooting operations.

  - Internetwork operator interface and value passing shall be transparent to internetwork architecture.

    - An operator interface connected to a controller shall allow the operator to interface with each internetwork controller as if directly connected.

Controller information such as data, status, and control algorithms shall be viewable and editable from each internetwork controller.

- Inputs, outputs, and control variables used to integrate control strategies across multiple controllers shall be readable by each controller on the internetwork. Program and test all cross-controller links required to execute control strategies specified in bid documents. An authorized operator shall be able to edit cross-controller links by typing a standard object address or by using a point-and-click interface.

- Controllers with real-time clocks shall use the BACnet Time Synchronization service. System shall automatically synchronize system clocks daily from an operator-designated controller via the internetwork. If applicable, system shall automatically adjust for daylight saving and standard time.

- System shall be expandable to at least twice the required input and output objects with additional controllers, associated devices, and wiring. Expansion shall not require operator interface hardware additions or software revisions.

- Operator Interface

  - Operator Interface. Web server shall reside on high-speed network with building controllers. Each standard browser connected to server shall be able to access all system information.

  - Communication. Web server and controllers shall communicate using BACnet protocol. Web server and control network backbone shall communicate using ISO 8802-3 (Ethernet) Data Link/Physical layer protocol and BACnet JIP addressing as specified in ASHRAE/ANSI 135-2001, BACnet Annex J.

  - Operator Functions: Operator interface shall allow each authorized operator to execute the following functions as a minimum:

    - Log In and Log Out. System shall require user name and password to log in to operator interface.

    - Point-and-click Navigation. Operator interface shall be graphically based and shall allow operators to access graphics for equipment and geographic areas using point-and-click navigation.

    - View and Adjust Equipment Properties. Operators shall be able to view controlled equipment status and to adjust operating parameters such as setpoints, PID gains, on and off controls, and sensor calibration.

    - View and Adjust Operating Schedules. Operators shall be able to view scheduled operating hours of each schedulable piece of equipment on a weekly or monthly calendar-based graphical schedule display, to select and adjust each schedule and time period, and to simultaneously schedule related equipment. System shall clearly show exception schedules and holidays on the schedule display.

    - View and Respond to Alarms. Operators shall be able to view a list of

currently active system alarms, to acknowledge each alarm, and to clear (delete) unneeded alarms.

- View and Configure Trends. Operators shall be able to view a trend graph of each trended point and to edit graph configuration to display a specific time period or data range. Operator shall be able to create custom trend graphs to display on the same page data from multiple trended points.

- View and Configure Reports. Operators shall be able to run preconfigured reports, to view report results, and to customize report configuration to show data of interest.

- Manage Control System Hardware. Operators shall be able to view controller status, to restart (reboot) each controller, and to download new control software to each controller.

- Manage Operator Access. Typically, only a few operators are authorized to manage operator access. Authorized operators shall be able to view a list of operators with system access and of functions they can perform while logged in. Operators shall be able to add operators, to delete operators, and to edit operator function authorization. Operator shall be able to authorize each operator function separately.

- System Software:

  - Operating System: Web server shall have an industry-standard professional-grade operating system. Acceptable systems include Microsoft Windows XP Pro, Red Hat Linux, or Sun Solaris.

  - System Graphics: Operator interface shall be graphically based and shall include at least one graphic per piece of equipment or occupied zone, graphics for each hot water system, and graphics that summarize conditions on each floor of each building included in this contract. Indicate thermal comfort on floor plan summary graphics using dynamic colors to represent zone temperature relative to zone setpoint.

    - Functionality: Graphics shall allow operator to monitor system status, to view a summary of the most important data for each controlled zone or piece of equipment, to use point-and-click navigation between zones or equipment, and to edit setpoints and other specified parameters. Animation Graphics shall be able to animate by displaying different image files for changed object status.

    - Alarm Indication: Indicate areas or equipment in an alarm condition using color or other visual indicator.

    - Format: Graphics shall be saved in an industry-standard format such as BMP, JPEG, or GIF. Web-based system graphics shall be viewable on browsers compatible with World Wide Web Consortium browser standards. Web graphic format shall require no plug-in (such as HTML and JavaScript) or shall require widely available no- cost plug-ins (such as Active-X and Macromedia Flash).

- System Tools: System shall provide the following functionality to authorized operators as an integral part of the operator interface or as stand-alone software programs. If furnished as part of the interface, the tool shall be available from each workstation or web browser interface. If furnished as a stand-alone program, software shall be installable on standard IBM-compatible PCs with no limit on the number of copies that can be installed under the system license.

  - Automatic System Database Configuration: Each workstation or web server shall store on its hard disk a copy of the current system database, including controller firmware and software. Stored database shall be automatically updated with each system configuration or controller firmware or software change.

  - Controller Memory Download: Operators shall be able to download memory from the system database to each controller.

  - System Configuration: Operators shall be able to configure the system.

  - Online Help. Context-sensitive online help for each tool shall assist operators in operating and editing the system.

  - Security. System shall require a user name and password to view, edit, add, or delete data.

    - Operator Access. Each user name and password combination shall define accessible viewing, editing, adding, and deleting functions in each system application, editor, and object.

    - Automatic Log Out. Automatically log out each operator if no keyboard or mouse activity is detected. Operators shall be able to adjust automatic log out delay.

    - Encrypted Security Data. Store system security data including operator passwords in an encrypted format. System shall not display operator passwords.

  - System Diagnostics. System shall automatically monitor controller and I/O point operation. System shall annunciate controller failure and I/O point locking (manual overriding to a fixed value).

  - Alarm Processing. System input and status objects shall be configurable to alarm on departing from and on returning to normal state. Operator shall be able to enable or disable each alarm and to configure alarm limits, alarm limit differentials, alarm states, and alarm reactions for each system object. Configure and enable alarm points as specified in bid documents. Alarms shall be BACnet alarm objects and shall use BACnet alarm services.

  - Alarm Messages. Alarm messages shall use an English language descriptor without acronyms or mnemonics to describe alarm source, location, and nature.

  - Alarm Notification. Alarm messages shall be transmitted to email ad-

dresses, telephone numbers, beeper numbers, etc. as directed by Town.

- Alarm Reactions. Operator shall be able to configure (by object) actions workstation or web server shall initiate on receipt of each alarm. As a minimum, workstation or web server shall be able to log, print, start programs, display messages, send e-mail, send page, and audibly annunciate.

- Alarm Maintenance. Operators shall be able to view system alarms and changes of state chronologically, to acknowledge and delete alarms, and to archive closed alarms to the workstation or web server hard disk from each workstation or web browser interface.

- Trend Configuration. Operator shall be able to configure trend sample or change of value (COV) interval, start time, and stop time for each system data object and shall be able to retrieve data for use in spreadsheets and standard database programs (active trend logs shall be in 15 intervals for all control inputs and outputs; minimum of one year of archive storage). Controller shall sample and store trend data and shall be able to archive data to the hard disk. Configure trends as specified in bid documents. Trends shall be BACnet trend objects.

- Object and Property Status and Control. Operator shall be able to view, and to edit if applicable, the status of each system object and property by menu, on graphics, or through custom programs.

- Reports and Logs. Operator shall be able to select, to modify, to create, and to print reports and logs. Operator shall be able to store report data in a format accessible by standard spreadsheet and word processing programs.

- Standard Reports. Furnish the following standard system reports:

  - Objects: System objects and current values filtered by object type, by status (in alarm, locked, normal), by equipment, by geographic location, or by combination of filter criteria.
  - Alarm Summary: Current alarms and closed alarms. System shall retain closed alarms for an adjustable period.
  - Logs: System shall log the following to a database or text file and shall retain data for an adjustable period:

    - Alarm History.
    - Trend Data. Operator shall be able to select trends to be logged.
    - Operator Activity. At a minimum, system shall log operator log in and log out, control parameter changes, schedule changes, and alarm acknowledgment and deletion. System shall date and time stamp logged activity.

- Custom Reports: Operator shall be able to create custom reports that retrieve data, including archived trend data, from the system, that analyze data using common algebraic calculations, and that present results in tabular or graphical format. Reports shall be launched from the operator interface.

- Graphics Generation: Graphically based tools and documentation shall allow Operator to edit system graphics, to create graphics, and to integrate graphics into the system. Operator shall be able to add analog and binary values, dynamic text, static text, and animation files to a background graphic using a mouse.

  - Dynamic Color Graphics: Dynamic Color Graphics shall be provided to include each point in an appropriate system or equipment graphic display.

    - An unlimited number of graphic displays shall be able to be generated and executed.

    - Graphics shall be based on Scalar Vector Graphic (SVG) technology.

    - Values of real time attributes displayed on the graphics shall be dynamic and updated on the displays.

    - The graphic displays shall be able to display and provide animation based on real-time, dynamic FMS data that is acquired, derived, or entered.

    - The user shall be able to change values (setpoints) and states in system-controlled equipment directly from the graphic display.

    - Provide a graphic editing tool that allows for the creation and editing of graphic files. It shall be possible to edit the graphics directly while they are on line, or at an off line location for later downloading to the Application Node.

    - FMS system shall be provided with a complete user expandable symbol library containing all of the basic symbols used to represent components of a typical FMS system. Implementing these symbols in a graphic shall involve dragging and dropping them from the library to the graphic."

- Graphics Library: Complete library of standard HVAC equipment graphics.

- Custom Application Programming: Operator shall be able to create, edit, debug, and download custom programs. System shall be fully operable while custom programs are edited, compiled, and downloaded. Programming language shall have the following features:

  - Language: Language shall be graphically based or English lan-

guage oriented. If graphically based, language shall use function blocks arranged in a logic diagram that clearly shows control logic flow. Function blocks shall directly provide functions listed below, and operators shall be able to create custom or compound function blocks. If English language oriented, language shall be based on the syntax of BASIC, FORTRAN, C, or PASCAL, and shall allow for free- form programming that is not column-oriented or "fill-in-the-blanks."

- Programming Environment: Tool shall provide a full-screen, cursor- and-mouse-driven programming environment or character editor that incorporates word processing features such as cut and paste. Operators shall be able to insert, add, modify, and delete custom programming code, and to copy blocks of code to a file library for reuse in other control programs.

- Independent Program Modules: Operator shall be able to develop independently executing program modules that can disable, enable and exchange data with other program modules.

- Debugging and Simulation: Operator shall be able to step through the program observing intermediate values and results. Operator shall be able to adjust input variables to simulate actual operating conditions. Operator shall be able to adjust each step's time increment to observe operation of delays, integrators, and other time-sensitive control logic. Debugger shall provide error messages for syntax and for execution errors.

- Conditional Statements: Operator shall be able to program conditional statements (IF/THEN/ELSE/ELSE-IF) using compound Boolean (AND, OR, and NOT) and relational (EQUAL, LESS THAN, GREATER THAN, NOT EQUAL) comparisons.

- Mathematical Functions: Language shall support floating-point addition, subtraction, multiplication, division, and square root operations, as well as absolute value calculation and programmatic selection of minimum and maximum values from a list of values.

- Variables: Operator shall be able to use variable values in program conditional statements and mathematical functions.

  - Time Variables: Operator shall be able to use predefined variables to represent time of day, day of the week, month of the year, and date. Other predefined variables or simple control logic shall provide elapsed time in seconds, minutes, hours, and days. Operator shall be able to start, stop, and reset elapsed time variables using the program language.

  - System Variables: Operator shall be able to use predefined variables to represent status and results of Controller Software and shall be able to enable, disable, and change setpoints of Controller Software as described in Controller Software section.

- Portable Operator's Terminal: Provide to the Awarding Authority all necessary software to configure an IBM-compatible laptop computer for use as a Portable Operator's Terminal. Operator shall be able to connect configured Terminal to the system network or directly to each controller for programming, setting up, and troubleshooting.

- Controller Software:
  - Building and energy management application software shall reside and operate in system controllers. Applications shall be editable through operator workstation, web browser interface, or engineering workstation.
  - Scheduling: System shall provide the following schedule options as a minimum:
    - Weekly: Provide separate schedules for each day of the week. Each schedule shall be able to include up to 5 occupied periods (5 start-stop pairs or 10 events).
    - Exception: Operator shall be able to designate an exception schedule for each of the next 365 days. After an exception schedule has executed, system shall discard and replace exception schedule with standard schedule for that day of the week.
    - Holiday: Operator shall be able to define 24 special or holiday schedules of varying length on a scheduling calendar that repeats each year.
  - System Coordination: Operator shall be able to group related equipment based on function and location and to use these groups for scheduling and other applications.
  - Binary and Analog Alarms.
  - Alarm Reporting.
  - Remote Communication: System shall automatically contact operator workstation or server on receipt of critical alarms. If no network connection is available, system shall use a modem connection.
  - Maintenance Management. System shall generate maintenance alarms when equipment exceeds adjustable runtime, equipment starts, or

    performance limits. Configure and enable maintenance alarms indicated on the Sequence of Operation.
  - Sequencing: Application software shall sequence mechanical equipment as indicated on the contract drawings.
  - PID Control: System shall provide direct- and reverse-acting PID (proportional-integral-derivative) algorithms. Each algorithm shall have anti-windup and selectable controlled variable, setpoint, and PID gains. Each algorithm shall calculate a time-varying analog value that can be used to position an output or to stage a series of outputs.

- Staggered Start: System shall stagger controlled equipment restart after power outage. Operator shall be able to adjust equipment restart order and time delay between equipment restarts.

- Energy Calculations:

  - System shall accumulate and convert instantaneous power (kW) or flow rates (L/s [gpm]) to energy usage data.

  - System shall calculate a sliding-window average (rolling average). Operator shall be able to adjust window interval to 15 minutes, 30 minutes, or 60 minutes.

  - System shall calculate a fixed-window average. Window interval start shall be defined by utility meter digital input signal to synchronize system's and utility's fixed-window averages.

- Anti-Short Cycling: Binary output objects shall be protected from short cycling by means of adjustable minimum on-time and off-time settings.

- On and Off Control with Differential: System shall provide direct- and reverse-acting on and off algorithms with adjustable differential to cycle a binary output based on a controlled variable and setpoint.

- Runtime Totalization: System shall provide an algorithm that can totalize runtime for each binary input and object. Operator shall be able to enable runtime alarm based on exceeded adjustable runtime limit. Configure and enable runtime totalization and alarms as specified in bid documents.

- Equipment:

  - General

    - The system to be comprised of a network, application specific controllers, all networked together via an RS-485 LAN to provide a complete control system, as herein specified. Controls for each system shall be provided as described in the sequences of operation.

  - Application Specific Controllers (ASC)

    - The Building Energy Management System (EMS) shall be able to extend its performance and capacity through the use of remote application specific controllers (ASCs) through LAN Device Networks.

      - Each ASC shall operate as a stand-alone controller capable of performing its specified control responsibilities independently of other controllers in the network. Each ASC shall be a microprocessor-based, multi-tasking, real-time digital control processor.

    - Each ASC shall be capable of control of the terminal device independent of the manufacturer of the terminal device.

    - Central System Controllers:

- Provide for control of central HVAC systems and equipment.

- Controllers shall include all point inputs and outputs necessary to perform the specified control sequences. Provide a hand/off/automatic switch for each digital output for manual override capability. Switches shall be mounted either within the controller's key-accessed enclosure, or externally mounted with each switch keyed to prevent unauthorized overrides. In addition, each switch position shall be supervised in order to inform the system that automatic control has been overridden.

- Each controller shall support its own real-time operating system. Provide either non-volatile memory or a time clock with battery backup to allow for stand-alone operation in the event communication with its SDC is lost and to insure protection during power outages.

- All programs shall be field-customized to meet the user's exact control strategy requirements. Central System controllers utilizing pre-packaged or canned programs shall not be acceptable. Where required, provide SDCs for all central equipment in order to meet custom control strategy requirements.

- Programming of central system controllers shall utilize the same language and code as used by SDC to maximize system flexibility and ease of use.

- Each controller shall have connection provisions for a portable operator's terminal. This tool shall allow the user to display, generate or modify all point databases and operating programs.

- Provide a door-mounted interface terminal to allow for direct-user access to the controller.

  - The terminal shall provide the user with the following functionality as a minimum:

    - View and set date and time
    - Modify and override time-of-day schedules
    - View points and alarms
    - Monitor points
    - Command and modify setpoints

  - Should the system controller be unable to interface to a door-mounted terminal, provide a laptop or similar terminal at the controller, or provide an SDC with a door-mounted or local terminal in lieu of the system controller in order to meet the specified minimum functionality.

- Automatic Control Valves

  - Control valves shall be two-way or three-way pattern as shown, constructed for tight shut off and shall operate satisfactorily against system

pressures and differentials. Two-way control valves shall exhibit equal percentage characteristics. Valves with size up to and including 2" shall be screwed with 250 psi ANSI pressure body rating; 2 1/2" and larger valves shall be flanged configuration. Proportional control valves shall be sized for a maximum pressure drop of 4.0 psig at rated flow (except as noted). Two-position control valves shall be line size and shall be provided with a 250-psi static pressure body rating.

- All valves shall be capable of operating in sequence when required by the sequence of operation. All control valves shall be sized by the control manufacturer and shall be guaranteed to meet heating loads specified.

- All control valves shall be suitable for the pressure conditions and shall close against the differential pressure involved. Valve operator connection type (screwed of flanged) shall conform to pipe schedule in this specification.

- Hot water control valves shall be normally open, single seated type with equal percentage flow characteristics. The valve discs shall be composition type with bronze trim.

- Valves shall be sized on the exact pressure drop for the equipment served to prevent over or under sizing the valves. Provide a separate submittal with all of this information included.

- Valve Actuators (Electronic):

  - Actuators shall be of the gear train or hydraulic type.

  - Actuators shall have integral mechanical stroke limiting adjustments to prevent actuator overstroke and automatic load sensing to protect from motor burnout in stall condition.

  - All actuators shall be sized by the ATC Subcontractor and guaranteed to provide torque and stroke characteristics for the applied duty. Output shall be compatible with outputs of the controlling device. All actuators shall be of the spring return type, linked normally open or closed as applicable and common to the application.

  - All actuators shall be of the direct analog fully proportioning variety. Two position or floating type control actuators may be used only if specifically mentioned in the sequence of operation.

- Temperature Sensors: Temperature sensors shall be RTDs or thermistors. Sensor Time Constant shall not exceed 5 seconds for a 60% response to a step change in temperature. Sensor repeatability shall be 0 ºF or better.

  - Space temperature sensor element shall be accurate within +0.5 ºF over a range from 40 ºF to 100 ºF. Sensors shall be housed in manufacturer standard miniature type thermostat cover and shall include exposed thermometer, setpoint adjustment and override button as specifically called for in the sequence of operation.

- Outside air temperature sensor elements for each of the controllers shall be accurate within +0.5 ºF over a range from -20 º F to 120 º F.

- Duct sensors shall be of the averaging type. Element length shall be adequate for sensing the average cross-sectional temperature over the full duct cross-section.

- Pressure Switches: The pressure switches shall meet but not be limited to the following specifications:

  - Sensing elements shall be capsule, diaphragm, bellow, bourdon tube, or solid state capable of withstanding 150% of rated pressure (sensor).

  - Switch actuation shall be adjustable for the specified application.

  - Switch shall have snap-action Form C contact rated for the application.

  - Gauge pressure switches shall have adjustable differential settings.

  - Accuracy of +1% of the switch setting.

  - Flow Switches: Flow switches shall meet but not be limited to the following specifications:

    - Repetitive accuracy of +1% of operating range.

    - Switch actuation adjustable over the operating flow range.

- Miscellaneous Control Panels: Details of each panel shall be submitted for review prior to fabrication. Locations of each panel shall be convenient for adjustment and service. Provide engraved nameplate beneath each panel mounted control device clearly describing the function of said device and range of operation. All manual switches shall be flush mounted on the hinged door.

- Air Compressor: Provide new ATC Air Compressor and Filter Dryer as indicated on contract drawings.

  - Air Compressor: Air Compressor shall be 30-gallon, duplex (3/4 hp each) compressor to match existing to be replaced for existing Automatic Control System to remain.

  - ATC Sub-Contractor shall mount pipe and wire (control, power) air compressor and filter dryer for a complete and operable system.

- All electrical devices within the panels shall be factory pre-wired to a numbered terminal strip. All wiring within the panel shall be in accordance with NEMA and UL Standards and shall meet all Local Codes. All wiring in occupied spaces shall be concealed.

- Sequences of Operation: Provide control components for each system as required for the sequence of operation indicated on the contract drawings.

D3710 -ROOF TOP UNITS

- Manufacturers:
  - Trane
  - Daikin
  - Miller-Picking
  - Temtrol
  - Or Approved Equal
- General Description
  - Configuration: Fabricate as detailed on drawings.
  - Performance: Conform to AHRI 430. See schedules on prints. (NOTE: above does not apply to fan array)
  - Acoustics: Sound power levels (dB) for the unit shall not exceed the specified levels shown on the unit schedule. The manufacturer shall provide the necessary sound treatment to meet these levels if required.
- Unit Construction
  - Unit Casing
    - Unit manufacturer shall ship unit in segments as specified by the Contractor for ease of installation in tight spaces. The entire air handler shall be constructed of galvanized steel. Casing finished to meet ASTM B117 250-hour salt-spray test. The removal of access panels or access doors shall not affect the structural integrity of the unit. All removable panels shall be gasketed. All doors shall have gasketing around full perimeter to prevent air leakage. Contractor shall be responsible to provide connection flanges and all other framework that is needed to properly support the unit.
    - Casing performance - Casing air leakage shall not exceed leak class 6 (CL = 6) per ASHRAE 111 at specified casing pressure, where maximum casing leakage (cfm/100 ft2 of casing surface area) = CL X P0.65.
    - Air leakage shall be determined at 1.00 times maximum casing static pressure up to 8 inches w.g. Specified air leakage shall be accomplished without the use of caulk. Total estimated air leakage shall be reported

      for each unit in CFM, as a percentage of supply air, and as an ASHRAE 111 Leakage Class.
    - Under 55F supply air temperature and design conditions on the exterior of the unit of 81F dry bulb and 73F wet bulb, condensation shall not form on the casing exterior. The AHU manufacturer shall provide test-

ed casing thermal performance for the scheduled supply air temperature plotted on a psychrometric chart. The design condition on the exterior of the unit shall also be plotted on the chart. If tested casing thermal data is not available, AHU manufacturer shall provide, in writing to the Engineer and Owner, a guarantee against condensation forming on the unit exterior at the stated design conditions above. The guarantee shall note that the AHU manufacturer will cover all expenses associated with modifying units in the field should external condensate form on them. In lieu of AHU manufacturer providing a written guarantee, the installing Contractor must provide additional external insulation on AHU to prevent condensation.

- Unit casing (wall/floor/roof panels and doors) shall be able to withstand up to 1.5 times design static pressure, or 8-inch w.g., whichever is less, and shall not exceed 0.0042 per inch of panel span (L/240).

- Floor panels shall be double-wall construction and designed to support a 300-lb load during maintenance activities and shall deflect no more than 0.0042 per inch of panel span.

- Unit casing panels shall be 2-inch double-wall construction, with solid galvanized exterior and solid galvanized interior, to facilitate cleaning of unit interior.

- Unit casing panels (roof, walls, floor) and doors shall be provided with a minimum thermal resistance (R-value) of 13 Hr*Ft2*°F/BTU.

- Unit casing panels (roof, walls, floor) and external structural frame members shall be completely insulated filling the entire panel cavity in all directions so that no voids exist. Panel insulation shall comply with NFPA 90A.

- Casing panel inner liners must not extend to the exterior of the unit or contact the exterior frame. A mid-span, no-through-metal, internal thermal break shall be provided for all unit casing panels.

- Access panels and/or access doors shall be provided in all Sections to allow easy access to drain pan, coil(s), motor, drive components and bearings for cleaning, inspection, and maintenance.

- Access panels and doors shall be fully removable without the use of specialized tools to allow complete access of interior surfaces.

- Access Doors

  - Access doors shall be 2-inch double-wall construction. Interior and exterior shall be of the same construction as the interior and exterior wall panels.
  - All doors downstream of the cooling coil shall be provided with a thermal break construction of door panel and door frame.
  - Gasketing shall be provided around the full perimeter of the doors to prevent air leakage.

- Door hardware shall be surface-mounted to prevent through-cabinet penetrations that could likely weaken the casing leakage and thermal performance.
- Handle hardware shall be designed to prevent unintended closure.
- Access doors shall be hinged and removable without the use of specialized tools.
- Hinges shall be interchangeable with the door handle hardware to allow for alternating door swing in the field to minimize access interference due to unforeseen job site obstructions.
- Door handle hardware shall be adjustable and visually indicate locking position of door latch external to the Section.
- All doors shall be a 60-inch high when sufficient unit height is available, or the maximum height allowed by the unit height.
- Multiple door handles shall be provided for each latching point of the door necessary to maintain the specified air leakage integrity of the unit.

- Primary Drain Pans
  - All cooling coil Sections shall be provided with an insulated, double-wall, galvanized drain pan.
  - The drain pan shall be designed in accordance with ASHRAE 62.1 being of sufficient size to collect all condensation produced from the coil and sloped in two planes, pitched toward drain connections, promoting positive drainage to eliminate stagnant water conditions when unit is installed level and trapped per manufacturer's requirements for specifications on intermediate drain pans between cooling coils.
  - The outlet shall be located at the lowest point of the pan and shall be sufficient diameter to preclude drain pan overflow under any normally expected operating condition.
  - All drain pan threaded connections shall be visible external to the unit. Threaded connections under the unit floor shall not be accepted.
  - Drain connections shall be of the same material as the primary drain pan and shall extend a minimum 2-1/2-inch beyond the base to ensure adequate room for field piping of condensate traps.
  - The installing Contractor is responsible to ensure the unit is installed level, trapped in accordance with the manufacturer's requirements, and visually inspected to ensure proper drainage of condensate.
  - Coil support members inside the drain pan shall be of the same material as the drain pan and coil casing.

- If drain pans are required for heating coils, access Sections, or mixing Sections they will be indicated in the plans.

- Fans

  - Fan Sections shall have a minimum of one hinged and latched access door located on the drive side of the unit to allow inspection and maintenance of the fan, motor, and drive components.

  - Provide fans of type and class as specified on the schedule. Fan shafts shall be solid steel, coated with a rust-inhibiting coating, and properly designed so that fan shaft does not pass through first critical speed as unit comes up to rated RPM. All fans shall be statically and dynamically tested by the manufacturer for vibration and alignment as an assembly at the operating RPM to meet design specifications. Fans that are selected with inverter balancing shall first be dynamically balanced at design RPM. The fans then will be checked in the factory from 25% to 100% of design RPM to insure they are operating within vibration tolerance specifications, and that there are no resonant frequency issues throughout this operating range. Inverter balancing that requires lockout frequencies inputted into a variable frequency drive to in order to bypass resonant frequencies shall not be acceptable. If supplied in this manner by the unit manufacturer, the Contractor will be responsible for rebalancing in the field after unit installation. Fans selected with inverter balancing shall have maintenance free, circumferential conductive micro fiber shaft grounding ring installed on the fan motor to discharge shaft currents to ground.

  - Fans, including belt driven and direct drive plenum fans with integral frame motors, shall be mounted on isolation bases. Internally-mounted motor shall be on the same isolation base. Fan and motor shall be internally isolated with spring isolators. A flexible connection shall be installed between fan and unit casing to ensure complete isolation. Flexible connection shall comply with NFPA 90A and UL 181 requirements. If fans and motors are not internally isolated, then the entire unit shall be externally isolated from the building, including supply and return duct work, piping, and electrical connections. External isolation shall be furnished by the installing Contractor in order to avoid transmission of noise and vibration through the ductwork and building structure.

- Motors and Drives

  - All motors and drives shall be factory-installed and run tested. All motors shall be installed on a slide base to permit adjustment of belt tension. Slide base shall be designed to accept all motor sizes offered by the air- handler manufacturer for that fan size to allow a motor change in the future, should airflow requirements change. Fan Sections without factory- installed motors shall have motors field installed by the Contractor. The Contractor shall be responsible for all costs associated with installation of motor and drive, alignment of sheaves and belts, run testing of the motor, and balancing of the assembly.

  - Motors shall meet or exceed all NEMA Standards Publication MG 1 - 2006 requirements and comply with NEMA Premium efficiency levels

when applicable. Motors shall comply with applicable requirements of NEC and shall be UL Listed.

- Fan Motors shall be heavy duty, open drip-proof operable at 460 volts, 60Hz, 3-phase. If applicable, motor efficiency shall meet or exceed NEMA Premium efficiencies.

- Direct driven fans utilizing integral frame motors shall use 2-pole (3600 rpm), 4-pole (1800 rpm) or 6-pole (1200 rpm) motors, NEMA Design B, with Class B insulation capable to operate continuously at 104 deg F (40 deg C) without tripping overloads.

- Motors shall have a +/- 10 percent voltage utilization range to protect against voltage variation.

- Coils

  - Coils section header end panel shall be removable to allow for removal and replacement of coils without impacting the structural integrity of the unit.

  - Install coils such that headers and return bends are enclosed by unit casing to ensure that if condensate forms on the header or return bends, it is captured by the drain pan under the coil.

  - Coils shall be manufactured with plate fins to minimize water carryover and maximize airside thermal efficiency. Fin tube holes shall have drawn and belled collars to maintain consistent fin spacing to ensure performance and air pressure drop across the coil as scheduled. Tubes shall be mechanically expanded and bonded to fin collars for maximum thermal conductivity. Use of soldering or tinning during the fin-to-tube bonding process is not acceptable due to the inherent thermal stress and possible loss of bonding at that joint.

  - Construct coil casings of galvanized steel steel. End supports and tube sheets shall have belled tube holes to minimize wear of the tube wall during thermal expansion and contraction of the tube.

  - All coils shall be completely cleaned prior to installation into the air handling unit. Complete fin bundle in direction of airflow shall be degreased and steam cleaned to remove any lubricants used in the manufacturing of the fins, or dirt that may have accumulated, in order to minimize the chance for water carryover.

  - When two or more cooling coils are stacked in the unit, an intermediate drain pan shall be installed between each coil. The intermediate drain pan shall be designed being of sufficient size to collect all condensation produced from the coil and sloped to promote positive drainage to eliminate stagnant water conditions. The intermediate drain pan shall be constructed of the same material as the Sections primary drain pan.

  - The intermediate drain pan shall begin at the leading face of the water-producing device and be of sufficient length extending downstream to prevent condensate from passing through the air stream of the lower

coil.

- Intermediate drain pan shall include downspouts to direct condensate to the primary drain pan. The intermediate drain pan outlet shall be located at the lowest point of the pan and shall be sufficient diameter to preclude drain pan overflow under any normally expected operating condition.

- Filters
  - Provide factory-fabricated filter Section of the same construction and finish as unit casings. Filter Section shall have side access filter guides and access door(s) extending the full height of the casing to facilitate filter removal. Provide fixed filter blockoffs as required to prevent air bypass around filters. Blockoffs shall not need to be removed during filter replacement. Filters to be of size, and quantity needed to maximize filter face area of each particular unit size.
  - Filter type, MERV rating, and arrangement shall be provided as defined in project plans and schedule
  - Manufacturer shall provide one set of startup filters.
- Dampers
  - All dampers, with the exception of external bypass and multizones (if scheduled), shall be internally mounted. Dampers shall be premium ultra-low leak and located as indicated on the schedule and plans. Blade arrangement (parallel or opposed) shall be provided as indicated on the schedule and drawings. Dampers shall be Ruskin CD60 double-skin airfoil design or equivalent for minimal air leakage and pressure drop. Leakage rate shall not exceed 3 CFM/square foot at one-inch water gauge complying with ASHRAE 90.1 maximum damper leakage and shall be AMCA licensed for Class 1A. All leakage testing and pressure ratings shall be based on AMCA Standard 500-D. Manufacturer shall submit brand and model of damper(s) being furnished, if not Ruskin CD60.

- Installation
  - Install in accordance with manufacturer's Installation & Maintenance Instructions.
- Environmental Requirements
  - Do not operate units for any purpose, temporary or permanent, until ductwork is clean, filters are in place, bearings lubricated, and fan has been test run under observation.
- Extra Materials
  - Provide two extra set(s) fan belts and filters for each unit as shown on project schedule.

- Tuttle & Bailey, Metal-Aire, Price, Titus, or approved equal. All air outlet finishes and color shall be as selected by the Architect and/or Engineer.

- Supply Air Devices:

  - Drum Louvers (DD): Extruded aluminum construction, fully adjustable and able to permit the project of air to 30 degrees on either side of the barrel axis. Outlet shall employ a double bank of individually adjustable diffusing vanes. Vane adjustment to allow lateral spread variation of discharge, rate of diffusion, and mixing and distance of throw. Ends of barrel to be provided with spread control members to insure positive response when pattern adjustment is needed. Provide duct mounting collars and opposed-blade, extruded aluminum volume control dampers. Sizes and capacities to be as schedule on the contract drawings.

  - Ceiling diffusers (SD): Steel construction, with baked acrylic enamel paint finish. Furnish with jet induction diffusing vanes to be located between discharge vanes. Diffusing vanes shall extend to the diffuser face and shall be designed to compress the air into jets which will induce room air. Jets from adjacent channels shall discharge in opposite directions to insure rapid mixing of primary and room air. Furnish with extruded aluminum, opposed blade volume control damper. Sizes and capacities to be as scheduled on the contract drawings.

  - Ceiling Diffusers – High Vented Throw (SDH): All ceiling duct work in ceilings over 10'-0" shall be High Vented Throw Diffusers. Steel louver face with adjustable pattern controllers for horizontal or vertical discharge airflow. The pattern controllers shall be accessible from the face. These diffusers shall have neck of the sizes and frame styles shown on the drawing. The diffuser shall have an easily removable core with fixed blades in 1, 2, 3, or 4- way configurations.

  - Supply Registers (SR): Heavy gauge steel construction with 1-1/4" overlap margin, countersunk screw holes and mounting screws. Supply registers shall adjustable vertical face bars, 3/4“on center with rear diffusing vanes. Provide with integral opposed blade damper designed for screwdriver operation.

  - Linear Diffusers (LD): Linear diffuser shall consist of exactly dimensioned aluminum extrusions with factory applied baked enamel finish. Plenums shall be factory constructed of minimum spangle zinc coated steel, no lighter than 26 gauge. Internal surfaces shall be acoustically lined and thermally insulated with 1/2" glass fiber material, surface to prevent erosion and having UL approval meeting NBFU 90A and NFPA. Diffuser sections shall be equipped with spring steel security clips.

- Exhaust (ER) and Return-Air (RR) Registers: Agitair Type A70D of similar material and construction as supply-air registers except with horizontal face bars fixed at 0 deg. Angle, with bar spacing 1/2" on center.

- At all branch takeoffs and where indicated provide vane deflectors (extractors)

behind registers and omit volume damper.

- Provide diffuser frame type (lay-in, surface mount, snap-in or spline) to match ceiling type.

D3730 -KITCHEN HOOD EXHAUST DUCT (KE)

- Furnish and install, where indicated on the drawings, a factory-built Underwriters Laboratories, Inc. listed kitchen hood exhaust duct as manufactured by Schebber, Van Packer, Metal-Fab or equal. The chimney shall be listed by UL as a “Grease Duct for Restaurant Cooling Appliances”.

- The kitchen hood exhaust duct manufacturer shall furnish all items which form a part of the assembly, including tee sections, straight sections, elbows, end caps, cleanouts, expansion joints, fan/hood transitions, supports, flashing, counter flashing, and insulated roof thimble. Each section shall bear the factory-applied Underwriters Laboratories label.

- Installation shall be made in accordance with the manufacturer’s recommendation and in compliance with the Underwriters Laboratories, Inc. listing.

- All kitchen hood exhaust duct sections shall be of double wall construction with a 1" air space between the liner and the shell. The liner shall be 20-gauge, type 304 stainless steel and the shell shall be of 24-gauge aluminized steel.

- All sections shall be joined with a vcc band sealed with acid resistant hi-temp joint cement supplied by duct manufacturer. Silicone sealant shall also be used on the draw band on exterior installations. Parts exposed to the atmosphere shall be given one prime coat and one finish coat of heat resistant paint.

- Transitions from kitchen hood exhaust duct to kitchen hoods and exhaust fans shall be prefabricated by the kitchen hood exhaust duct manufacturer to provide a UL listed system including transitions.

- Diameter shall be as indicated on the drawings. Submit layout drawings by kitchen hood exhaust duct manufactured for review.

D3740 -VARIABLE AIR VOLUME TERMINAL UNITS

- Furnish and install single duct, variable air volume terminal units where shown on the drawings. Size, type, capacity and performance to be as scheduled on the drawings. Units to be similar and equal in all respects to Enviro-Tec, Titus, Nailor, or equal.

- Terminals shall be certified under the ARI Standard 880-94 Certification Program and carry the ARI Seal.

- The terminal casing shall be minimum 22-gauge galvanized steel, internally lined with non-porous, sealed liner which complies with UL 181 and NFPA 90A. Insulation shall be 1-1/2 lb. density. All cut edges must be sealed to prevent erosion while all discharge edges of the unit liner must be secured with metal brackets.

- The damper shall be heavy gauge steel with shaft rotating in Delrin or bronze oilite self-lubricating bearings. Shaft shall be clearly marked on the end to indicate damper position. Stickers or other removable markings are not acceptable. The damper shall incorporate a mechanical stop to prevent overstroking and a synthetic seal to limit close-off leakage.

- Actuators shall be capable of supplying at least 35 in.-lb. of torque to the damper shaft and shall be mounted externally for service access. Terminals with internal actuator mounting or linkage connection must include gasketed access panel, removable without disturbing ductwork.

- At an inlet velocity of 2000 fpm, the differential static pressure required to operate any terminal size shall not exceed .18-inch wg. for the basic terminal.

- Provide all with optional sound attenuators.

- Sound ratings for the terminal shall not exceed 20 NC at 0.5-inch static pressure. Sound performance shall be ARI certified.

- Unit mounted controls will be provided by the ATC Contractor

D3750 -SCAFFOLDS AND STAGING

- General: Obtain required permits for, and provide scaffolds, staging, and other similar raised platforms, required to access their Work.

    - Scaffolding and staging required for use by this Filed Subcontractor shall be furnished, erected, maintained in a safe condition, and dismantled when no longer required, by this Filed Sub-Trade requiring such scaffolding.

    - Each contractor is responsible to provide, maintain and remove at dismantling, all tarpaulins and similar protective measures necessary to cover scaffolding for inclement weather conditions.

    - Furnishing portable ladders and mobile platforms of all required heights, which may be necessary to perform the work of this trade, are the responsibility this Filed Subcontractor.

D3760 -HOISTING MACHINERY AND EQUIPMENT

- All hoisting equipment, rigging equipment, crane services and lift machinery required for the work by this contractor shall be furnished, installed, operated and maintained in safe conditions by this contractor.

D3770 -GENERAL

- Install all items specified under D30 – HEATING VENTILATION AND AIR CONDITIONING, according to the applicable manufacturer's recommendations and shop drawings, the details shown on the drawings and as specified under this section. Provide all required hangers and supports.

- All welding done under this section shall be performed by experienced welders in a neat and workmanlike manner. All welding done on piping, pressure vessels and structural steel under this section shall be performed only by persons who are currently qualified in accordance with ANSI Code B31.1 for Pressure Piping and certified by the American Welding Society, ASME or an approved independent testing laboratory; and each such welder shall present his certificate

  attesting his qualifications to the Engineer's representative whenever requested to do so on the job.

- All pipe welding shall be oxyacetylene or electric arc. High test welding rods suitable for the material to be welded shall be used throughout. All special fittings shall be carefully laid out and joints shall be accurately matched intersections. Care shall be exercised to prevent the occurrence of protruded weld metal into the pipe. All welds shall be of sound metal free from laps, cold shots, gas pockets, oxide inclusions and similar defects.

- All necessary precautions shall be taken to prevent fire or damage occurring as the result of welding operations.

D3780 -PIPING

- Provide and erect in a workmanlike manner according to the best practices of the trade, all piping shown on the plans or required to complete the installation intended by these specifications.

- This contractor shall inform himself from the Architect's specifications and detailed drawings of the exact dimensions of finished work in all rooms where equipment or pipes are to be placed, and arrange his work accordingly, assuming all responsibility for conformity with the surrounding work.

- In the erection of mains, special care must be used in their support and proper allowance shall be made for expansion.

- All steel piping larger than 2 inches shall have welded joints made by experienced pipe welders. The joints shall all be well filled with metal without interior projections. After welds are made, this contractor shall thoroughly clean inside and leave a smooth bore. Where connections are made on runs, weld-o- lets or thread-o-lets are to be used.

- All other connections are to be made with screwed fittings.

- In making welds, this contractor is to have the end of the pipe properly beveled and perfectly lined up.

- Keep plugged or capped all openings in pipes or fittings.

- Connections to mains are to be provided with swing arms to provide for expansion.

- Make such offsets as are shown or required to place pipes on risers in proper

position or to avoid other work. Make such offsets neatly and properly locate them to the satisfaction of the Architect.

- All pipe lines are to be provided with sufficient number of flange fittings or unions to make possible the taking down of the pipes without breakage of fittings. Lines 2 inches in diameter and less may be connected by R & L couplings, unless otherwise required by the Architect. All of the piping shall be erected so as to provide for the easy flow of water and noiseless circulation. Whenever pipes are cut, three-wheel cutters are to be used and the pipes are to be carefully reamed out.
- Due to the extreme limited headroom, all water mains shall be installed perfectly level or with minimum pitch. Install air vents on all high points and drawoff valves on all low points throughout the entire system.
- The entire piping system shall be provided with shutoff valves and drawoff valves so that sections of the system may be drained without interrupting the entire system.
- Extreme care shall be exercised in the location of all piping.
- No crosses or bull head tees shall be used in any part of the work.
- Piping connections to all equipment shall be made with companion flanges or unions for ease in removal of equipment.
- Provide approved pipe identification markers and flow direction arrows on all piping. Markers to be at 30-foot intervals, except in boiler room where they shall be at 10 foot intervals.

D3790 -VALVES

- Valves shall be installed where shown on plans and elsewhere as necessary for the proper operation or balancing of the systems.
- At completion, this Contractor shall install stamped brass tag on each valve held on with brass drain (except on fan-coil unit valves) with numbers. This contractor is to make up schedule with number of each valve. Schedule to describe use of each valve. One copy of schedule to be framed under glass and hung in boiler room. Two more copies are to be supplied to the Architect.
- Extreme care must be used in locating fin tube radiation valves and fittings in order that they shall be installed so as to be readily accessible.
- Install on each coil a key type compression air valve.

D3800 -PIPE HANGERS

- Pipe hangers of the types specified shall be installed for the support of all piping. Maximum center-to-center hanger spacing shall be as follows, except as otherwise indicated on the Drawings.

Pipe Size	Max. Spacing

Up to 1-1/4″	5′-0″
1-1/2″ and 2″	8′-0″
2-1/2″ and 3″	8′-0″
Over 4″	10’-0″

D3810 -SLEEVES

- Sleeves shall be installed for each pipe passing through masonry floors or walls.

D3820 -ESCUTCHEON PLATES

- Escutcheon plates shall be installed on all piping passing through finished floors, walls or ceilings. Escutcheon plates shall be sized for outside diameter of insulation and installed after insulation is completed.

D3830 -INSULATION

- All of the insulation work shall be done by contractors regularly engaged in this type of work in a neat and workmanlike manner. All insulation shall be completely sealed with no glass fibers exposed to the air.

D3840 -VIBRATION ABSORPTION

- All equipment and piping shall operate without objectionable or unusual noise or vibration, as judged by the Engineer.

- Rotating equipment shall be fitted with such vibration-absorbing facilities as will be required to limit the transmission of vibration to the building and to the attached piping and breaching. The facilities shall be generally designed to limit this transmission to a maximum of 2%, but a greater amount will be allowed if it does not prove objectionable. The facilities shall also be designed to limit equipment floor loadings to 500 lb/sq. ft. or less. If, in order to accomplish this, the equipment requires the job installation of isolation mountings, inertia blocks, special hangers or other arrangements, these shall be carefully and specifically selected for each piece of equipment.

- Motor driven equipment shall have the motor, equipment and drive mounted on a common base. Hollow bed plates shall be grouted with a rich cement mortar.

- Submit shop drawing data for approval by the Engineer showing the make, type, and size of isolation mountings, flexible pipe connectors, and other facilities to be provided, including any concrete inertia blocks that may be required. The data shall clearly indicate that the isolating arrangements can and will limit the transmission of vibration as specified.

D3850 -MISCELLANEOUS IRON AND STEEL

- Provide steel supports and hangers required to support fans, tanks, air handling units, pipe, ductwork, and other equipment or materials. Submit details of steel supports and method of fabrication for approval.

- All work shall be cut, assembled, welded and finished by skilled mechanics. Welds shall be ground smooth. Stands, brackets, and framework shall be properly sized and strongly constructed.

- Measurements shall be taken on the job and worked out to suit adjoining and connecting work. All work shall be by experienced metal working mechanics. Members shall be straight and true and accurately fitted. Scale, rust, and burrs shall be removed. Welded joints shall be ground smooth where exposed. Drilling, cutting and fitting shall be done as required to properly install the work and accommodate the work of other trades as directed by them.

- Members shall be generally welded, except that bolting may be used for field assembly where welding would be impractical. Welders shall be skilled.
- All shop-fabricated iron and steel work shall be cleaned and dried and given a shop coat of paint on all surfaces and in all openings and crevices.

D3860 -EQUIPMENT

- Equipment shall be installed complete with all required hangers and supports in accordance with the manufacturer's recommendations.

- Furnish and install all steel structural support members for proper hanging and support of equipment. Provide vibration isolation on all hangers.

- All equipment shall be installed in strict accordance with manufacturer’s written installation instructions.

- All equipment and associated components requiring access for periodic inspection, filter changes, or maintenance shall be located over accessible ceilings; if located above inaccessible ceilings with approval of Architect and Engineer, provide access panels with appropriate fire ratings for required access at no additional cost to the project.

D3870 -AUTOMATIC TEMPERATURE CONTROLS

- System shall be complete with all control wiring, switches, relays, transformers, and other accessories.

- The Control System herein specified shall be free from defects in workmanship and material under normal use and service. After completion of the installation, regulate and adjust all thermostats, control valves, control motors, and other equipment provided and/or wired under this contract. If within twelve (12) months from the date of completion, any of the system herein described is proved to be defective in workmanship or materials, it will be replaced or repaired free of charge.

- Provide any service incidental to the proper performance of the Control System under guarantees outlined above for the period of one year. Normal maintenance of the system or adjustments of components is not to be considered part of the guarantee.

D3880 -WATER TREATMENT

- General:
  - Provide, where shown on the drawings and as specified hereinafter, the necessary apparatus to provide cleaning water treatment and complete water treatment services for the hot water and chilled water system.
  - A contract agreement satisfactory in form and substance to the Owner shall be executed between the Contractor and the water treatment company through its authorized agents, binding the water treatment company to provide supervisory service to assure the use of proper chemical treatment to the system for a period of one year from the date of the initial system start and treatment thereof. The contract shall be assigned to the Owner on the date that the building is accepted by the Owner so that water treatment will continue uninterrupted during the one-year life of the contract. The water treatment company shall perform the following consulting analysis service.
  - Supervise the cleaning and flushing out of the system.
    - After completing the installation or modification of the system, it shall be properly flushed out prior to start-up. Flush-out chemicals and procedures shall be furnished by the water treatment company.
    - Tests shall be made following the flush-out procedure and a written report submitted to the Engineer, Owner and Contractor stating that the flushing-out has been completed satisfactorily. Residual chemical levels shall be limited as follows:
      - phosphate – zero
      - alkalinity to 100 ppm max.
      - suspended solids – zero
      - pH value of 8.4 or less
    - All side loops and low points shall be drained and flushed.
      - Systems shall then be refilled and treated chemically in accordance with recommendation of the water treatment company. The Contractor shall notify the water treatment contractor at least 48 hours in advance of initial system fill.
      - It shall be the responsibility of the Contractor to secure an agree-

ment between the chiller manufacturer, circulating pump manufacturer and the water treatment company as to the proper level of treatment to be maintained in the system to avoid damage to chiller, pumps and pump seals. A letter stating such understanding shall be submitted to the Engineer before approval of the pumps and the water treatment program.

- Supervise and instruct the Owner's operating personnel in the following:
  - initial introduction of water treatment to all systems and the control thereof;
  - chemical product literature, identification for use and application procedure;
  - testing procedure and interpretation of test results and proper control limits for each constituent; and
  - log sheets with instructions in correct entry procedure.
- Provide service calls at frequency of not less than one call per month thereafter.
- Furnish all required chemicals for proper treatment of the system for the one-year period together with the necessary control testing kit or apparatus and reagents for field analysis of the water during the aforementioned one-year period.
- Provide written reports of water analysis results with recommendations.
- Provide a quarterly review of conditions with the Owner.
- The Contractor shall assume responsibility for the field testing and control and the regular addition of chemical treatment.

- Qualifications of the Water Treatment Company:
  - The water treatment company shall have a minimum of five years of experience in the water treatment business, have laboratory facilities and staff capable of performing all necessary analyses relating to this job, and the treatment programs shall be under the direction of a graduate chemist or licensed professional engineer.

- Cleaning and Flushing:
  - Exercise every precaution to avoid introducing foreign matter such as welding beads and slag or dirt into the piping system. All completed welds shall be hammered to loosen debris. All piping, valves and fittings shall be internally cleaned of oil, grease or dirt, prior to assembly into system by use of wire brush and swab.
  - All cleaning and flushing work shall be coordinated with and supervised by the water treatment company for chemicals and procedures to be followed.

- Following the successful testing of the piping systems, they shall be cleaned under the supervision of the water treatment company.
- Before submitting piping systems for acceptance, all strainers shall be inspected and thoroughly cleaned.
- Cleaning shall be started only after all piping has been hydrostatically tested and all systems have been completely connected up.
- Operate pumps and circulate water throughout system for period of three 8-hour days. At the end of each day of circulation, remove and clean all strainer baskets and blow off all low points.

- Closed Recirculation Systems:
  - The piping system shall be thoroughly flushed and cleaned with Dearborn BC-45 Cleaner, Dow, Barclay or approved equal, and charged with Dearborn B-329 Nitrite Corrosion Inhibitor, Dow, Barclay or approved equal, after cleaning. Control limits of 800 to 1,000 ppm shall be maintained. The bypass shall be piped across the suction/discharge pipes of the system.

D3890 -START-UP

- Contractor shall provide manufacturer's start-up and functional performance testing for all equipment installed as part of this work. Contractor shall be responsible for all labor, materials and equipment required to accomplish this service.
- Contractor shall complete start-up reports and documentation for all equipment.

D3900 -BALANCING, ADJUSTING, OPERATING, AND INSTRUCTIONS

- The HVAC contractor shall engage the services of an firm to perform testing, adjusting and balancing of the HVAC systems.
- Engage a balancing company to adjust, balance, and operate the heating, ventilating and air-conditioning system and thoroughly instruct the Owner's personnel in all phases of care and operation of the systems. The Balancing Company shall be certified by Associated Air Balance Council or by the National Environmental Balancing Bureau.
- Before the air systems are tested and balanced, ducts and equipment shall be thoroughly cleaned by the contractor so that no dirt, dust, or other foreign matter will be deposited in or carried through the systems. For this purpose, cheesecloth shall be placed over each opening for entraining such particles during the cleaning operation.
- The Contractor as a part of this contract shall provide all materials, labor, and service of all contractors for fulfillment of air and water balancing of all systems. The Balancing Company shall inform Contractor of all requirements ahead of time.

- All equipment shall be operated and adjusted and all air and water systems shall be adjusted and balanced, readings taken and recorded on an approved form submitted to the Engineer for approval, readjusted and rebalanced in accordance with the Engineer's review comments and resubmitted.

- Air Systems:

  - Contractor shall test and record existing Makeup Air Unit (MAU) supply airflow rates prior to cooling coil installation and modified intake ductwork construction. Record findings and report existing MAU supply airflow rates to engineer in writing.

  - Adjustments shall be made to the existing MAU supply air fan motor assembly post-installation of modified cooling coil installations. Contractor shall adjust supply air motor assemblies to target CFM airflow rates to maintain existing supply air rates that occurred prior to intake duct modifications. Report supply airflow rates in writing to engineer for review.

- Water Systems:

  - Water circulating system shall be adjusted and balanced by the Balancing Company so that water quantities circulated through all coils, pumps, equipment, etc., will be as specified.

  - Where no meters are provided, the adjustment of individual coil circuits shall be based on return water temperature, provided air balancing and adjusting has been satisfactorily completed first. Temperature control valves on each branch shall be wide open during the balancing. Adjustment of water flows through coils shall be based on manufacturers pressure drop data. Balancing cocks and valves shall be set. The settings of cocks, valves, etc., shall be permanently marked so that they can be restored if disturbed at any time.

  - The following shall be established and listed:

    - Temperatures and water flow at the pumps and each coil after each complete system has been balanced and adjusted.

    - Pressure drops, manufacturer's ratings, and water flow at each coil after each complete system has been balanced and adjusted.

    - Suction and discharge pressures at each pump and total water flow at each coil after each complete system has been balanced and adjusted.

    - Motor amperage for each phase and voltage at each pump.

- The Balancing Company shall provide all instruments and accessories required to perform the tests.

- Upon completion of the systems, during the first stages of the first cooling season, the Balancing Company shall operate the systems until temperatures in all areas are uniform. The period of time shall be no less than a five-day, forty-hour period. During these times, the Balancing Company shall keep at least

two men on the job continuously, together with a man from the temperature control Sub-Subcontractor for the purpose of testing and balancing systems.

- The Contractor shall obtain from the manufacturer of each piece of equipment, five (5) copies of lubrication, operating and maintenance data sheets and control system drawings. He shall prepare five (5) complete sets of written coordinating operating and maintenance instructions into complete operating and maintenance manuals.

D3910 -TESTING

- All hot water piping in whole or in part, prior to insulating and being closed in, shall be subject to a hydrostatic test pressure of 100 psig for eight hours without a pressure drop at the end of the test period. All leaks that occur shall be repaired by removing the joints in their entirety, rejoining, and test repeated as often as necessary until the piping system or systems are absolutely tight.

- Furnish all necessary equipment to conduct the testing of the piping system.

- Two pressure gauges shall be used whose range shall not exceed 0 to 150 psig, nor be less than 0 to 120 psig. Evidence of leakage or pressure drop shall be cause for rejection.

- A log of all tests shall be kept by the Contractor. The log shall provide a description of the test or inspection, the date performed, and the signatures of the responsible contractor's person performing the work and the witnessing engineer. This log shall form part of the final documentation. Failure to maintain this log will result in re-inspection or testing at the Contractor's expense.

D3920 -PLACING IN SERVICE

- At the completion of performance tests and following approval of test result, recheck all equipment to see that each item is adequately lubricated and functioning correctly.

D3090 - OTHER SPECIAL HVAC SYSTEMS AND EQUIPMENT

Provide smoke control system for School Commons Atrium. APPENDIX V – HVAC SMOKE EVACUATUION NARRATIVE

D40: FIRE PROTECTION SYSTEMS

D4010 - General Requirements

- Examine all Project Specifications and Drawings for requirements which affect work of this Section whether or not such work is specifically mentioned in this Section.

- The following definitions apply to the Drawings and Specifications:

  - Furnish: The term "furnish" is used to mean "supply and deliver to the Project site, ready for unloading, unpacking, assembly, installation, and similar operations."

  - Install: The term "install" is used to describe operations at project site including actual "unloading, unpacking, rigging in place, assembly, erection, placing, anchoring, applying, working to dimension, finishing, curing, protecting, cleaning, and similar operations."

  - Provide: The term "provide" means to "furnish and install, complete and ready for intended use."

  - Installer: An "installer" is the contractor or an entity engaged by the contractor, either as an employee, subcontractor, or sub-subcontractor for a performance of a particular construction activity, including installation, erection, application and similar operations. Installers are required to be experienced in the operations they are engaged to perform.

  - Contractor: "Sprinkler Contractor" D4020 -SCOPE OF WORK

- The work under this section shall include the furnishing of all materials, labor, equipment, and supplies to provide a complete working system. Work includes but is not limited to the following:

  - Installation of a complete and functional hydraulically calculated sprinkler system and combination standpipe riser system in accordance with local and state regulations, NFPA Fire Protection Standards, and Owner Standards

  - Alarm system devices including alarm valves, flow/pressure switches, tamper switches and coordination with Fire Alarm Systems.

  - Shop drawings and calculations prepared and submitted in accordance with the requirements of the local fire department.

  - Permits and approvals of the fire protection system.

  - Coordination drawings

  - Fire service from a point 10'-0" outside of building foundation.

- New hydrant flow test
- Complete automatic wet sprinkler system.
- Automatic sprinkler heads.
- Sprinkler accessories.
- Inspector's test connections.
- Standpipes and drain risers.
- Fire department connections.
- Fire department valves and cabinets.
- Backflow preventer.
- Escutcheons.
- Hangers.
- Pressure gauges at top of standpipes
- Piping and valves.
- Access panels.
- Valve tags and hydraulic design information tags.

D4030 -CODES, PERMITS AND FEES

- Unless otherwise specified or indicated, materials, workmanship and equipment performance shall conform with the latest governing edition of the following standards, codes, specifications, requirements, and regulations, but not limited to:
  - All Applicable NFPA Standards
  - Massachusetts State Building Code, latest edition
  - American Society of Mechanical Engineers
  - American Society of Testing and Materials
  - American National Standards Institute
  - State and Local Plumbing and Gas Codes
  - Underwriters' Laboratories, Inc.
  - Occupational Safety and Health Administration
  - Owners Insurance Authority guidelines

- Massachusetts D.E.P.

- Any other local codes or authorities having jurisdiction, including any other standards specifically indicated in other paragraphs of this specification.

- Under this Section of the Specification, pay all fees, submit all necessary documents, obtain all permits, certificates and necessary approvals from authorities having jurisdiction. Prior to installation, provide copies of all permits, approvals and certificates to the supervising Architect/Engineer for his record. All costs for these requirements shall be borne under this section of the specification.

D4040 -SURVEYS AND MEASUREMENTS

- Under this section of the Specification, base all required measurements, both horizontal and vertical, from referenced points established and be responsible for correctly laying out of the work required under this section of the specification.

- In the event of discrepancy between actual measurements and those indicated, notify the Architect in writing and do not proceed with the related work until instructions have been issued.

- Prior to bid, The Contractor shall visit the site and review the drawings to familiarize himself with the areas of work as well as all of the existing conditions to which the work of this section is to be installed, prior to design or installation. Any apparent discrepancies or conflicts between the new work and any existing conditions shall be submitted to the Architect in writing. Failure of the contractor to familiarize himself with all aspects of the new work and the existing conditions will not be a basis for extra costs to the contract.

D4050 -CUTTING AND PATCHING

- All cutting and patching necessary for the proper installation of work to be performed under this Section and subsections shall be performed by the Sprinkler Contractor. All cutting and patching associated with demolition work required for the installation of work under this section shall be by the General Contractor.

- Execute cutting and drilling by methods which will prevent damage to the other work and will provide proper surfaces to receive installation of sprinkler piping.

- Prior to cutting or drilling existing surfaces, examine surfaces to be cut. Take corrective action before proceeding if unsafe or unsatisfactory conditions are encountered.

- Do not cut away any structural wood, steel, concrete, brickwork, floor construction or arches, or dig under any foundation or into walls, or in any case, allow the same to be done without the full knowledge and consent of the Architect/Engineer. This Contractor will be held responsible for any damage result-

ing from such work so done.

- All drilling and patching for expansion bolts, hangers, and other supports shall be done by this Contractor.

- All cutting and patching made necessary by reason of neglect, error or defects of material and labor furnished by him shall be done and paid for by this Contractor.

- Where possible, use materials that are identical to existing materials. Restore exposed finishes of patched areas in a manner that will eliminate evidence of patching and refinishing. Existing painted surfaces shall be repainted to match.

- The fire resistance rating of floors, walls and ceilings shall be maintained. UL listed firestopping shall be installed in accordance with manufacturer's recommendations.

- All cutting of, or damage to, any existing conditions, shall be repaired to the satisfaction of the owner, at no extra cost to the contract.

D4060 -ACCESS PANELS

- Furnish access panels for installation in walls, ceiling and floors at locations to permit access for adjustment, removal, replacement and servicing of all concealed equipment, valves and materials installed under this Section of the specifications.

- Access panels will be installed under the Section of the related trades of the finished surfaces in which they are located.

- All access panels shall be located in a workmanlike manner, in closets, storage rooms and/or other non-public areas, positioned so that the equipment can be easily reached, and the size shall be sufficient for this purpose (min. 12" x 12"). When access panels are required in corridors, lobby or other habitable areas, they will be located as directed by the Architect.

- Access panels shall be in strict conformance with Section C - Interiors. Access panel shop drawings shall be submitted to the Architect for approval.

D4070 -SLEEVES, INSERTS AND ANCHOR BOLTS

- Coordinate with other trades the location of and maintaining in proper positions, sleeves, inserts and anchor bolts to be supplied and/or set in place under this section of the specifications. In the event of incorrectly located preset sleeves, inserts and anchor bolts, etc., all required cutting and patching of finished work shall be done under this section of the specifications.

- Unless otherwise specified herein, all pipes passing through rated floors, walls, ceilings or partitions shall be provided with sleeves. All sleeves through the computer room and plenum walls shall be sealed air-tight.

- Filed drilling (core drilling), when required, shall be performed under this sec-

tion of the specifications, after receipt of approval by the Architect/Engineer and the General Contractor.

D4080 -SUPPLEMENTARY STEEL, CHANNELS AND SUPPORTS

- Provide all supplementary steel, factory fabricated channels and supports required for proper installation, mounting and support of all equipment and systems provided under this section of the specification.

- Supplementary steel and factory fabricated channels shall be firmly connected to building construction in a manner approved by the Architect, as shown on the drawings, or hereinafter specified.

- The type and size of the supporting channels and supplementary steel provided under this section of the specifications shall accommodate all deflections in conformance with the manufacturer's requirements for the specific loading on the system installed therein.

- All supplementary steel and factory fabricated channels shall be installed in a neat and workmanlike manner parallel to the walls, floors and ceiling construction. All turns shall be made with 90 degree and 45-degree fittings, as required to suit the construction and installation conditions.

- All supplementary steel including factory fabricated channels, supports and fittings shall be Underwriters' Laboratories, Inc. approved, shall be galvanized steel where exposed or subject to rust producing atmosphere and shall be manufactured by Unistrut, Powerstrut or approved equal.

D4090 -CROSS AND INTERCONNECTIONS

- No equipment, devices or piping shall be installed which will provide a cross or interconnection between a distribution water supply and a drainage, soil or waste pipe which will permit or make possible the backflow of sewage, polluted water or waste into the water supply system.

D4100 -PIPE, FITTINGS AND JOINTS

- Piping and fittings shall conform to the latest ANSI, ASTM, and NFPA and AWWA Standards including latest amendments and shall be in conformance with state and local plumbing codes, material standards.

- Each length of pipe, each pipe fitting, trap, materials and/or device used in the respective system shall have cast, stamped or indelibly marked on it, the maker's name or mark, weight and quality of the product when such marking is required by the approved standard that applies.

- Service:

  - Fire Protection/Sprinkler Above Ground (2” and smaller)

  - Pipe Material: Schedule 40 Black Steel for wet pipe system

- Fitting Material: Cast Iron 175 psi W.P.
- Pipe Joint: Cast iron Screwed fittings for wet pipe system Service
- Fire Protection/Sprinkler Above Ground (2- 1/2" and larger)
- Pipe Material: Schedule 10 Black Steel for wet pipe systems Fire Protection Pipe: 2-1/2" through 5" shall have a minimum wall thickness of Schedule 10;
  .134" wall thickness for 6" pipe and .188" for 8" and 10" pipe.
- Fitting Material: Malleable Iron 175 psi W.P.
- Pipe Joint: Roll-Grooved with Victaulic fittings

- Joints:
  - Joints in steel pipe above ground shall be threaded/flanged or a listed mechanical compression type coupling consisting of a neoprene collar, ductile iron coupling with zinc plated bolts and nuts all assembled to provide seal.
  - Steel, copper and brass pipe and fittings with threaded ends shall have IPS threads cut clean and true and in conformance with the ANSI Specifications B2-1 for taper threads.
  - Pipe roll grooving shall be in accordance with manufacturer's specifications contained in their latest published literature and NFPA 13.
  - All sprinkler piping in exposed areas shall be of a type suitable for painting.
- Underground fire service piping and fittings shall be in accordance with NFPA 13 and NFPA 24 shall be listed for such use.
- Fire Protection Service – Underground
  - Cast Iron Pipe: Class 200, with flanged joints, ASA 21.2 or bell and spigot ASA 21.6. Cement-mortar lined, ASA 21.4.
    - Fittings: Cast Iron Flanged, ASA B16.1 Class 125; bell and spigot ASA 21.10; fittings to be cement mortar lined ASA21.4.
    - Ductile Iron Pipe: Class 50
  - Gate Valves: AWWA C500-

59T. D4110 -VALVES

- General
  - Shutoff valves on the aboveground Fire Protection System shall be UL, FM butterfly, or OS&Y gate valves on sizes 2-1/2" and larger, valves up to 2" shall be UL, FM Ball Valves. All isolation valves shall be electronically su-

pervised.

- Check valves shall be 175-pound class for fire protection.

- Valves shall be provided with seats suitable for the service intended.
- Where isolation valves or inspectors test & drain valves are installed above suspended ceiling tiles, the ceiling tiles under the valve shall be clearly labeled as to identify the type, function, and location of the isolation valve. The valve control shall be located for accessibility.

- All fire department hose valves shall be approved by the local fire department prior to purchase and installation.

D4120 -SPRINKLER SYSTEM VALVES

- Valves shall be as manufactured by Nibco, Victaulic, Wallworth, Milwaukee or approved equal.

- All valves specified herein shall be UL/FM approved 175 PSI minimum working pressure. All control valves shall be provided with tamper (supervisory) switches. All valves shall be approved for fire protection service.

  - Butterfly valves with integral tamper switch or gate valves with tamper switch shall be provided in all aboveground piping. Butterfly valves 2-1/2" and larger shall be UL/FM approved, with ductile iron body and EPDM rubber- coated, ductile iron one-piece disc and upper stem. The body shall be coated with heat-fused PPS blend meeting UL/ULC and FM requirements for corrosion resistance. Valves 2" and smaller shall be UL/FM approved standard port, end entry ball valves with integral tamper switch and rated for 300 psi. The ball shall be polished type 316 stainless steel with stainless steel stem and TFE seats.

  - Combination Inspectors Test & Drain valves shall be a prefabricated Test Module complete with ductile iron body, combination sight glass, 1/2" corrosion resistant orifice and bronze top works, test valve, drain valve, and rated for 300 psi. The test module shall be threaded inlet and outlet connections. Victaulic "TestMaster" or equal.

  - Check valves shall be UL/FM approved swing check valve with ductile iron body, brass seat, and rubber faced clapper assembly. Provide flanged or roll groove ends as applicable. The valve shall be rated at 175 psi working pressure.

  - O S & Y valves shall be ductile iron body, rising stem and UL/FM approved. All O S & Y valves shall be provided with tamper switches to suit. Provide flanged ends.

D4130 -HANGERS AND SUPPORTS

- Hangers shall be installed, as required, to meet NFPA compliance as to location/spacing.

- Hanger material shall be compatible with piping materials with which it comes into contact.

- Hangers shall be installed, in addition to the above, at all changes of direction (horizontal and vertical), valves and equipment connections. Hangers shall be located so that their removal is not required to service, assemble or remove equipment.

- Horizontal runs may use band hangers up to 4" size. Piping larger than 4" shall be provided with clevis type.

- Vertical support shall be by means of riser clamps (anchors with split ring type allowable up to 2" size only) and adjustable pipe support with flange anchored to floor.

- Rods, clamps and hangers shall be electro-galvanized coated.

- All nuts, inserts and hardware shall be stainless steel.

- Size of hanger rods shall not be less than the following:
  3/4" to 1-1/2" pipe 3/8" rod
  2" to 3-1/2" pipe 1/2" rod
  4" to 6" pipe 5/8" rod

D4140 -SLEEVES AND ESCUTCHEONS

- All pipes passing through rated floors, walls, or partitions shall be provided with sleeves having an internal diameter with a minimum of one inch larger than the outside diameter of the pipe.

- Sleeves through interior masonry floors and walls shall be Schedule 40, black, steel pipe. Sleeves through interior non-masonry walls or partitions shall be 22-gauge galvanized sheet steel.

- The sleeves through walls shall be provided with pipe to wall penetration closures. Seals shall be mechanical type of interlocking rubber links shaped to fill space between pipe and sleeve. Links shall be assembled with bolts to form a belt around the pipe with pressure plate under each bolt head and nut. After seal assembly is positioned, tightening of bolts will provide watertight seal. This Contractor shall determine the required inside diameter of each individual sleeve before ordering, fabricating or installing. The inside diameter of each sleeve shall be sized as recommended by the manufacturer to fit the pipe and to assure a watertight joint. All sleeves shall be sealed air-tight.

- Sleeves through walls shall terminate flush with face of wall. Sleeves through floor shall terminate 1" above finished floor.

- Required fire resistance of floors and walls shall be maintained where penetrations occur. Fire stopping at sleeves shall be UL listed material.

- Escutcheons shall be provided with a set screw to properly hold escutcheon in

place and provided at all exposed floor and wall penetrations.

D4150 -SPRINKLER SYSTEM

- The new sprinkler system shall be automatic, wet type as noted on Drawings and as manufactured by Viking, Victaulic, Reliable or Tyco. All sprinkler systems, valves, piping, hangers, supports, switches, and all associated equipment and

  material shall be UL listed and FM approved for use with fire protection systems. All equipment as mentioned above shall be rated at 175 psi working pressure.

  - System shall be complete packaged with all necessary controls and including, but not limited to the following:

    - Sprinkler Heads and Related Piping and Valves
    - Related Check and Shut-off Valves
    - Inspector's Test Valves and Drains
    - Flow and tamper switches
    - Seismic Bracing
    - Fire Department Connection and supply piping if a second connection is required.

  - System shall be designed, installed, and tested in accordance with NFPA 13 and NFPA 14 latest accepted editions and the rules and regulations of all local authorities and the owner's insurance authority and the Massachusetts State Building Code, latest edition.

- Sprinkler Heads

  - Sprinkler heads shall be installed in accordance with architectural reflected ceilings in all areas. The contractor shall coordinate with the architectural ceiling plans and the electrical lighting plans for exact locations of ceilings and light fixtures and for laying out all final locations of sprinkler heads and piping. All sprinkler heads in suspended ceilings shall be installed in center of ceiling tiles unless otherwise directed by the owner.

  - Automatic Sprinklers: Sprinklers, in general, shall be automatic closed type with a 1/2" nominal size orifice. Unless otherwise indicated on the drawings, temperature rating of fusible elements shall be in accordance with NFPA 13. Automatic sprinklers of standard temperature rating (155°F) shall be used except in areas above normal temperatures, will occur. In such area's intermediate temperature sprinklers (212°F) shall be provided. Sprinkler heads, escutcheon plates and finishes shall be UL listed and / or FM approved.

  - Sprinkler heads in unfinished ceiling areas shall be upright style with rough brass finish and glass bulb fusible elements and shall be as listed on the drawings.

- High temperature sprinkler heads shall be located in the mechanical room, all electrical rooms, all attic spaces, and as noted on the drawings.

- All Sprinkler heads in all areas shall be listed quick response.

- Sprinkler heads in finished ceiling areas shall be concealed pendent style or concealed sidewall style, as indicated, in factory applied finishes to match the

  walls and ceilings to which the sprinkler heads will be installed. All escutcheon plates and concealed head covers shall be provided with factory applied finishes to match the finishes of the ceilings and walls to which the sprinkler heads will be installed and shall be as manufactured by Viking, Victaulic, Reliable, or Tyco and shall be as listed on the drawings.

- Sprinkler heads above ceilings within the concealed spaces shall be special listed concealed space sprinklers.

- Spare Sprinkler Heads and Cabinet

  - Provide at each sprinkler alarm check valve, a metal cabinet containing spare sprinkler heads and wrenches.

  - Cabinet shall have shelves for storing the spare sprinkler heads in an orderly manner. The shelf spaces shall be subdivided to segregate the sprinkler heads of each type and clearly identify them with approved markings. Cabinet shall have proper arrangements for hanging the wrenches. Wrenches shall be located so as to be readily accessible.

  - Cabinet shall be dust-tight and red in color, enameled finish. The outside of the cabinet door shall have painted on it in legible and clear lettering "Automatic Sprinklers - Reserve Supply" suitable standard instructions pertaining to the sprinkler systems and any other necessary information shall be fastened onto the inside of the cabinet door.

  - The cabinet size and number of each type spare sprinkler heads shall conform to NFPA 13.

- Tamper (Supervisory) Switches (as required)

  - Provide with each control valve in the system a UL and FM approved tamper- proof monitor switch (N.O.). Wiring of each monitor switch to fire alarm control panel to be provided under D50 - Electrical. Tamper switches shall be provided with two sets of pre-action contacts.

- Flow Switch (vane type or pressure type as required)

  - Provide UL and FM approved adjustable vane type flow switch on Wet. All flow switches shall be provided with adjustable retard devices to prevent false alarm due to water pressure surges as applicable. Wiring of each monitor switch to fire alarm control panel to be provided under D50 - Electrical. Flow switches shall be provided with two sets of pre-action contacts.

- Transmitting equipment provided under this Section of the specification for

alarm valve and tamper switch alarms located in fire alarm central panel must be compatible in all respects with fire alarm supervisory control system. Refer to D50 - Electrical for requirements before purchasing transmitting equipment as herein specified for fire protection equipment.

D4160 -SPRINKLER SHOP DRAWINGS

- Contractor shall provide shop drawings and hydraulic calculations for approval for entire system.
    - Provide a full set of hydraulic calculations. Hydraulic calculations shall be complete and correct in every respect in accordance with NFPA 13 for wet pipe systems, latest accepted edition. Final construction design shall be based on these calculations and drawings. The areas indicated shall be equipped throughout with an approved automatic fire suppression system.
    - The Contractor shall prepare working plans and hydraulic calculations stamped by a registered Professional Engineer of the entire systems in accordance with NFPA 13, latest accepted edition, and shall have these drawings and calculations approved by the Town of Leicester Inspectional Services Fire Department and the Owner's insuring authority and so stamped and signed, and submit such stamped and signed drawings to the Architect for approval. No work shall be installed by this Contractor until the drawings have been returned to the Contractor with the above approvals in addition to the Architect's approval.
    - The contract drawings are not intended to show the exact number and location of heads or the exact routing and sizing of all piping or the exact locations and sizes of equipment in all of the areas to be protected with sprinklers, or the exact method of installing the sprinkler system. The Contractor shall be responsible for this and shall indicate this on his sprinkler system shop drawings and hydraulic calculations.
    - Hydraulic calculations shall be performed on the remote sprinkler area for each floor of the building and for each floor zone. The remote design areas shown on the contractor drawings are not intended to be used by the sprinkler contractor for performing the shop drawing hydraulic calculations. The sprinkler contractor shall be responsible for determining all remote areas of hydraulic calculations. These areas shall be determined in accordance with NFPA 13.
- Refer to the fire protection drawings for design criteria.

D4170 -SEISMIC RESTRAINT

- Seismic restrain shall be installed in accordance with Massachusetts State Building Code, latest edition, and NFPA 13 latest edition.
- Maximum distance between braces in the lateral direction shall be 30' for piping 2" and smaller and 40' for piping 2-1/2" and larger.
- Maximum distance between braces in the longitudinal direction shall be 80'.

- Tops of risers shall be provided with 4-way braces.
- Flexible couplings shall be provided within 12" of floor and wall non-frangible penetrations and within 24" of all building expansion joints.
- Hangers closest to the sway bracing shall be installed with an extended rod to the piping to resist upward movement of the piping.
- Lateral sway bracing shall not be required on piping supported with rods less than 6" long.
- Seismic bracing for lateral and longitudinal bracing may be of the splayed wire (tension type), or pipe and fixed hanger (tension/compression type), and shall be complete with manufacturers recommended sizing, locations and calculations. One system only (tension or compression/ tension) shall be installed.
- Clamps for attachment to the building structure must be provided with retaining straps.
    - 4-way bracing may be of the splayed wire type or fixed Angle brace with U bolt.

D4180 -IDENTIFICATION

- General
    - Equipment, piping and valves provided under this Section of the Specifications shall be marked for ease of identification as indicated below.
    - Marking shall be done using self-adhering labels applied to clean, smooth surfaces. All lettering shall have a sharply contrasting background for ease of identification. Colors shall be in accordance with ANSI Standards. Samples of stickers together with color schedules shall be submitted for approval.
- Pipe Identification
    - Provide color coded pipe identification markers on all new fire protection mains. Pipe markers shall be heavy plastic faced cloth labels with heat resistant backing, "Set Mark" by Seton Nameplate Corporation, Zipper Tubing Co. or equal by the W.H. Brady Company or approved equal.
    - Provide an arrow marker with each pipe content marker to indicate the direction of flow.
    - Piping mains shall be labeled at 20' intervals and on entrance and exit from the Fire Service Entrance Rooms, adjacent to each valve and at both sides of wall penetrations.
    - The following color coding shall be used with names in black letters on backgrounds indicated.
    - Schedule of Piping Identification:

- Service: Fire Protection
- Legend: Fire Protection Water
- Background Color: Red

- In general, a 2" high legend shall be used for pipe lines 4" diameter and larger, and a 3/4" high legend shall be used for pipe lines 3" diameter and smaller.
- All markers shall be OSHA approved.

- Valve Tags
  - All valves on pipes of every description shall have neat circular black and white laminated fiber-engraved white showing through tags of at least 1-1/2" in diameter, attached with a brass hook to each valve stem. Stamp on these valves tags in letters, as large as practical, the number of the valve and the service such as indicated on the "Valve List". The numbers on each service shall be consecutive. All valves on tanks and pumps shall be numbered by 3" black and white laminated fiber-engraved white showing through discs with white numbers 2" secured to stem of valves by means of brass hooks or small solid link brass chain.
  - The valve numbers shall correspond with numbers indicated for valves and controls on two printed valve lists prepared by the Contractor. These printed lists shall state the numbers and locations of each valve and control and the section, fixture or equipment which it controls, and other necessary information, such as requiring the opening or closing of another valve when one valve is to be opened or closed.
  - The valve lists shall be prepared in a form to meet the approval of the Architect and shall be mounted framed under glass at the direction of the Owner.

D4190 -TESTING

- General
  - All labor, materials, instruments, devices and power required for testing shall be provided by this Contractor. The tests shall be performed in the presence and to the satisfaction of the Architect, Fire Department and the Owners Insurance Authority, and such other parties as may have legal jurisdiction. No piping in any location shall be closed up, furred in, or covered before testing.
  - Where portions of piping systems is to be covered or concealed before completion of the project, those portions shall be tested separately in the manner specified herein for the respective entire system.
  - Any piping or equipment that has been left unprotected and subject to mechanical or other injury in the opinion of the Architect shall be retested in part or in whole as directed.

- The Architect retains the right to request a recheck or resetting of any instrument by this contractor during the guarantee period at no additional cost to the Contractor.
- Repair, or if directed, replace any defective work with new work without extra charge to the Contract. Repeat tests as directed, until the work is proven to meet the requirements specified herein.

- Restore to its finished condition any work, damaged or disturbed, provided by other contractors and engage the original contractor to do the work of restoration to the damaged or disturbed work.

- Caulking of screwed joints or holes in piping will not be acceptable.

- This Contractor shall notify the Architect, Town of Leicester Inspectional Services Fire Department, The Owner, the Owners Insurance Authority, and any inspectors having jurisdiction, a minimum of 48 hours in advance of making any required tests so that arrangements may be made for their presence to witness his scheduled tests.

- Specific:

  - Sprinkler Systems

    - Testing shall be in accordance with NFPA 13, latest accepted edition.

    - Each system shall be tested to a hydrostatic pressure of 200 PSI for two hours.

    - Flushing shall be performed at a minimum rate of 390 GPM for systems supplied by a 4" alarm valve and 880 GPM for systems with a 6" alarm valve.

    - All water flow detecting devices and circuits shall be flow tested through the inspector's test connection and activate within five minutes of initiation.

    - The wet pipe and pre-action sprinkler systems shall undergo a live test to verify their performance. Testing shall be in accordance with the manufacturer's instructions.

    - All testing shall be witnessed by the local fire department.

D4200 -CLEANING AND ADJUSTING

- Cleaning and Adjusting

  - At the completion of the work, all parts of the installation shall be thoroughly cleaned. All equipment, pipe, valves and fittings shall be cleaned of grease, metal cuttings and sludge which may have accumulated by operation of the system for testing.

  - Any stoppage or discoloration or other damage to parts of the building, its

finish, or furnishings, due to this Contractor's failure to properly clean the piping system shall be repaired by this Contractor at no increase in Contract costs.

- All items of equipment shall be thoroughly inspected and any items dented, scratched or otherwise damaged in any manner shall be replaced or repaired and painted to match the original finish. All items so repaired and refinished shall be brought to the attention of the Construction Manager for inspection and approval.

- Continuously remove debris from work areas and remove debris, waste, scrap, excess materials, etc., from the work on completion in any area.

D4210 -CERTIFICATES OF APPROVAL

- Upon completion of the work, furnish to the Owner in duplicate, certificates of inspection and/or approval from state and local inspection authorities having jurisdiction indicating the installed systems compliance to their requirements.

D4220 -SYSTEMS

- Fire Protection Systems
  - This Contractor shall comply with rules, codes, ordinances, regulations and requirements of all legally constituted authorities having jurisdiction over the whole, or any part of the work herein specified. These rules and regulations supplement this Specification and shall take precedence in any case of conflict.
  - Materials and equipment furnished in connection with the installations shall be new and furnished in accordance with the requirements of the Standards of the NFPA Bulletin Nos. 13 and they shall be the best grade and quality of their respective kinds, free from natural, manufacturing or construction flaws, deflects or irregularities and the finish, fitting and workmanship shall be equal to the highest commercial grade.
  - Fire Protection System shall be installed in such a manner as to harmonize with the special architectural features of the building. All information required by this Contractor concerning the special architectural features of the building may be obtained from the Contract Documents.
  - Systems shall include, but are not limited to, sprinkler heads and escutcheons, control valves, check valves, electric alarms, piping, fittings, hangers, drains, Inspector's test connections, flow switches, control valve monitor switches, signs and other identification markings as required.

D4230 -GENERAL INSTALLATION REQUIREMENTS

- Piping Installation
  - Piping shall be installed straight and direct as possible forming right angles or parallel lines with building walls, other piping and neatly spaced.

- The horizontal runs of piping, except where concealed in partitions, shall be installed as high as possible.
- Piping or other apparatus shall not be installed in such a manner so as to not interfere with the full swing of the doors and access to other equipment.
- The arrangement, positions and connections of pipes, drains, valves, and the like, indicated on the drawings shall be followed as closely as possible, but the right is reserved by the Architect to change locations and elevations to accommodate the work, without additional compensation for such change.
- It shall be possible to drain the water from all sections of each above-ground sprinkler piping system. Pitch piping back to drain valves.
- Screwed piping of brass or chrome plated brass shall be made up with special care to avoid marring or damaging pipe and fitting exterior and interior surfaces.
- Small fittings shall be screwed up close to the shoulders of male threads. Lampwick, cord, wool, or any other similar material shall not be used to make up thread joints.
- Screwed pipe and copper tubing shall be reamed smooth before installation.
- Reducing fittings, unless otherwise approved in special cases, shall be provided in making reduction in size of pipe. Bushings will not be allowed.
- Vertical risers shall be firmly supported by riser clamps, properly installed to relieve all weight from the fittings.
- Any piece of pipe six inches or less in length shall be considered a nipple.
- All fire protection service piping shall be kept a sufficient distance from other work to permit finished covering to be not less than 1" from other work.
- The pipe and fittings shall be manufactured in the United States of America and in accordance with the Commercial Standards, American National Standards Institute and American Society of Testing Materials.
- All work associated with the grooving, threading, or cutting of piping shall be done outside of the building. Finished pipe sections shall be brought into the building and care shall be taken so as not to damage pipe ends. No pipe cutting or grooving equipment will be allowed inside the building.
- After all work and testing are complete and after acceptance of the system, the contractor shall remove all debris, tools, equipment, etc., from the work areas both inside and outside the building.
- Special care shall be given when making pipe joint connections so as not to produce leaks or dampness around the joints. During pressure testing, any dampness detected around joints and couplings shall be fixed by disassembling the joint or coupling, thoroughly cleaning and pre-actioning the

pipe and couplings, reassembling the joint or coupling, and re-testing the sprinkler system.

- Victaulic “Pressfit” system shall be installed in strict accordance with the manufacturer’s instructions and all applicable codes.

- Hanger Installation

  - All piping shall be supported from the building structure by means of approved hangers and supports, to maintain proper grading and pitching of lines, to prevent vibration and to secure piping in place, and shall be so arranged as to provide for expansion and contraction.

  - Vertical hanger rods to support piping from the structure or supplementary steel shall not exceed four feet in total length vertically, this Contractor shall provide factory fabricated channels and all associated accessories.

  - Friction clamps shall be installed at the base of the risers and at each floor (above or below floor slabs). Friction clamps installed above floor slabs shall not be supported from or rest on floor sleeves.

  - Provide hangers at a maximum distance of two feet from all changes in direction (horizontal and vertical), on both sides of concentrated loads (equipment) and at valves.

  - Hangers, in general, for all horizontal piping shall be A Band type hangers for piping up to 4" size and Clevis type for piping 5" and larger.

  - All supplementary steel including factory fabricated channels and associated accessories throughout both suspended and floor mounted shall be provided by this Contractor and shall be subject to the approval of the Architect.

  - Wire, tape or wood fastenings for shims or support of any pipe or tubing shall not be used.

  - Remove all rust from the ferrous galvanized hanger equipment (hangers and rods) and apply one coat of galvanized paint immediately after erection.

  - Piping at all equipment and each control valve shall be supported to prevent strains or distortions in the connected equipment and control valves. Piping and equipment shall be supported to allow for removal of equipment, valves and accessories with a minimum of dismantling and without requiring additional support after these items are removed.

  - All piping shall be independently supported from the building structure and not from the piping, ductwork, conduit or ceiling suspension systems of other systems.

  - Installation of hangers which permit wide lateral motion of any pipe will not be acceptable.

  - All hangers in contact with un-insulated piping shall be compatible with piping material.

- Installation of Sleeves, Inserts and Escutcheons
  - Sleeves in floors shall set one (1) inch above the finished floor surface or as indicated on the Architectural Drawings.
  - Sleeves through interior masonry or non-masonry walls or partitions shall be set flush with the finished surfaces of the wall or partition.
  - Field drilling for inserts required for work under this section of the specifications shall be provided by this Contractor.
  - Each interior wall or partition sleeve shall be packed with foam, glass wool or approved substitute flush with each face of wall.
  - Escutcheons shall be installed around all exposed piping passing through floor, wall or ceiling. Escutcheons shall fit snugly around the bare or insulated pipe.

D4240 -WATERPROOFING

- Pipes passing through slabs shall have the sleeve extended 1/4" above floors of finished spaces and 2" above floors of mechanical equipment rooms. Except as specified below, the space between the pipe and sleeve shall be caulked with lead wool. The top shall be sealed with lead and the bottom shall be sealed with monolastic caulking compound.

D4250 -MISCELLANEOUS IRON AND STEEL

- Provide steel supports and hangers as shown on the drawings or required to support valves, pipe, ductwork, and other equipment or materials.
- All work shall be cut, assembled, welded and finished by skilled mechanics. Welds shall be ground smooth. Stands, brackets, and framework shall be properly sized and firmly constructed.
- Measurements shall be taken on the job and worked out to suit adjoining and connecting work. All work shall be by experienced metal working mechanics. Members shall be straight and true and accurately fitted. Scale, rust, and burrs shall be removed. Welded joints shall be ground smooth where exposed. Drilling, cutting and fitting shall be done as required to properly install the work and accommodate the work of other trades as directed by them.
- Members shall be generally welded, except that bolting may be used for field assembly where welding would be impractical. Welders shall be skilled.
- All shop fabricated iron and steel work shall be cleaned and dried and given a shop coat of paint on all surfaces and in all openings and crevices.
- Submit details of all equipment supports and attachments for approval.

D4260 -CUTTING AND PATCHING

- All cutting and patching necessary for the proper installation of work to be performed under this Section and subsections shall be performed by the Contractor.

- All work shall be fully coordinated with all phases of construction, in order to minimize the requirements for cutting and patching.
- The Contractor shall form all chases or openings for the installation of his own work, or shall cut the same in existing work and shall see that all sleeves or forms are in the work and properly set in ample time to prevent delays. He shall see that all such chases, openings, and sleeves are located accurately and are of the proper size and shape and shall consult with the Architect and the Contractors or subcontractors concerned in reference to this work. In so doing, he shall confine the cutting to the smallest extent possible consistent with the work to be done. In no case shall piers or structural members be cut without the approval of the Architect.

- The Contractor shall carefully fit around, close up, repair, patch, and point around the work specified herein to match the existing adjacent surfaces and to the entire satisfaction of the Architect.

- The Contractor shall fill and patch all openings or holes left in the existing structures by the removal of existing equipment by himself.

- All of this work shall be carefully done by workmen competent to do such work and with the proper and smallest tools applicable.

- Any cost caused by defective or ill-timed work shall be borne by the contractor responsible therefore.

- Provide all cutting and patching work required for installation of materials and equipment under this section of the specifications, in such a manner so as to leave the work complete and in a condition that matches existing corresponding area.

- When, in order to accommodate the work required under this section of the specifications, finished materials of other trades must be cut or fitted, furnish the necessary drawings and information to the trades whose materials must be cut or fitted.

- Do all required drilling and cutting of holes in concrete walls and floors for the installation of sleeves and supports provided under this section of the specification.

- After installation of pipe lines, the Contractor shall neatly patch, repair, and replace existing work where damaged, removed or altered for pipe line installation. This work shall be similar and equal in quality to the work removed or damaged, unless otherwise shown or specified. Such work shall include replacement of existing lines at points of connections to new lines, patching of masonry work, and wherever any such patching work is indicated on drawings or otherwise required.

D4270 -PAINTING AND EARTHWORK

- All painting and earthwork shall be provided under section G10 - EARTHWORK, and section C20 – INTERIOR FINISH

D4280 -EQUIPMENT

- Equipment shall be installed complete with all required hangers and supports in accordance with the manufacturer's recommendations.

- All equipment provided under this Section shall be installed in strict accordance with manufacturer's written installation instructions.

- Furnish and install all steel structural support members for proper hanging and support of equipment. Provide vibration isolation on all hangers.

D50: ELECTRICAL SYSTEMS

D5000 - GENERAL REQUIREMENTS

A. The electrical system shall be designed per NFPA 70, the Massachusetts Electrical Code (MEC), Federal, State, local and all other applicable codes.

B. The Electrical Design will meet or exceed LEED Silver, v4.1 standard for energy efficiency effective January 1, 2020.

C. MA energy code will be based on the 2018 version of the IECC, and the 2016 version of ASHRAE 90.1, including any MA amendments.

D. The Building shall be enrolled in the Demand Management Programs offered by local Utility Co.

D5010 - ELECTRICAL SERVICE AND DISTRIBUTION

A. Main Switchboard:

1. Service entrance equipment shall comply with NEMA PB 2, NFPA 70 and UL 891.
2. Nominal System Voltage: 480Y/277V.
3. Main-Bus: 2000A.
4. Main Breaker: 2000A, 65KAIC with Ground Fault Protection.
5. Phase and Neutral Buses and Connections: Three phase, four wire unless otherwise indicated. Tin-plated, high-strength, electrical-grade aluminum alloy with tin-plated aluminum circuit-breaker line connections.
6. Ground Bus: 1/4-by-2-inch- (6-by-50-mm-) minimum size, hard-drawn copper of 98 percent conductivity, equipped with pressure connectors for feeder and branch-circuit ground conductors.
7. Surge Protection Device Description: IEEE C62.41-compliant, integrally mounted, solid-state, parallel-connected, with sine-wave tracking suppression and filtering

modules, UL 1449, second edition, short-circuit current rating matching or exceeding the switchboard short-circuit rating.

8. All circuit breakers in the main switchboard shall be Standard Micrologic (LSI) with solid-state trip unit and flux transfer shunt trip. Breakers shall have trip rating plugs with ratings as indicated on the drawings. Rating plugs shall be interlocked so they are NOT interchangeable between frames and interlocked such that a breaker cannot be latched with the rating plug removed.

D5010 - INTERIOR DISTRIBUTION TRANSFORMERS

B. The interior distribution transformer shall be DOE 2016 compliant, ST20 and relevant NEMA, UL and IEEE standards; 200% rated neutral; 60Hz rated. All terminals, including those for changing taps, must be readily accessible by removing a front cover plate. Windings shall be continuous with terminations brazed or welded. 10kV BIL.

C. Insulation System: Shall be NOMEX-based with an Epoxy Co-polymer impregnant for lowest environmental impact, long term reliability and long-life expectancy.

1. Class: 220 degrees C.
2. Impregnant Properties for low emissions during manufacturing, highest reliability and life expectancy.
3. Epoxy co-polymer.
4. VOC: less than 1.65 lbs. /gal (low emissions during manufacturing).
5. Water absorption (24hrs @25C): less than 0.05% (superior insulation, longer life).
6. Chemical Resistance: Must have documented excellent performance rating by supplier.
7. Dielectric Strength: minimum of 3200 volts/mil dry (for superior stress, overvoltage tolerance).
8. Dissipation Factor: max. 0.02 @25C to reduce aging of insulation, extending useful life.
9. Operating Temperature Rise: 115 degree C in a 40 degree C maximum ambient.
10. Noise levels: Per NEMA ST-20.

D5010 - PANELBOARDS

A. Panelboards shall comply with UL 67, UL 50 and NEMA PB 1.

B. Panelboards for non-linear loads shall be UL listed, including heat rise tested, in accordance with UL 67, except with the neutral assembly installed and carrying 200 percent of the phase bus current during testing. Provide molded case circuit breakers in accordance with UL 489.

C. Surge Protection Device for non-linear panelboards: IEEE C62.41.1 – 2002, IEEE C62.41.2 – 2002, UL 1449 Third Edition, or most recent edition & NEC Article 285 - compliant and test devices according to IEEE C62.45 - 2002, integrally mounted, bolt-on, solid-state, parallel-connected, modular (with field-replaceable modules) type, with sine-wave tracking suppression and filtering modules, UL labeled with 200 kA short-circuit current rating (SCCR), and matching or exceeding the panelboard short-circuit rating, redundant suppression circuits, with thermally protected metal-oxide visitors.

D5010 - ENCLOSED SWITCHES AND CIRCUIT BREAKERS

A. Circuit Breakers: Provide molded case circuit breakers in accordance with UL 489. Provide with solid neutral when grounded conductor is present.

B. Fusible Switch, 1200A and Smaller: NEMA KS 1, Type HD, with clips or bolt pads to accommodate specified fuses, lockable handle with capability to accept two padlocks, and interlocked with cover in closed position.

C. Non-fusible Switch1200 A and Smaller: NEMA KS 1, Type HD, lockable handle with capability to accept two padlocks, and interlocked with cover in closed position.

D5010 - GENERAL PURPOSE ELECTRICAL POWER

A. A minimum of three general purpose duplex receptacles and one computer double duplex receptacle shall be provided in offices.

B. A minimum of two double duplex receptacles with USB Type C connectors shall be provided in classrooms for teacher stations. A duplex receptacle shall be provided for the touchscreen display; two duplex receptacles on dedicated circuits shall be provided for charging stations; two duplex receptacles shall be provided for the media cart and a minimum of eight general purpose receptacles shall be provided for general use in the classrooms.

C. A minimum of one general purpose duplex receptacle shall be provided in utility and storage rooms.

D. Multiple service floor outlets or fire rated poke-thru devices shall be provided for equipment and appliances in the commons areas when the equipment is to be placed on worktables, counters, systems furniture, or cabinets that are not against fixed walls.

E. All new feeders shall be installed in PVC conduits when installed underground or under slab; or in EMT when installed concealed or exposed inside the building. All new branch circuit wiring shall be Type MC cable. All telecommunications and low voltage wiring shall be installed in conduit stubs to accessible ceilings, ladder tray, wire basket and supported by j-hooks.

D5010 LEGALLY REQUIRED STANDBY POWER SYSTEM- SMOKE CONTROL

A. A 400A legally required Automatic Transfer Switch (ATS) shall be installed for the smoke exhaust fans.

B. The generator shall feed a legally required life safety panel with a 400A-3P MCB, 480/277V panelboard.

C. A 30kVA 480V-120/208V stepdown transformer shall feed a 125A MCB, 208/120V legally required panelboard.

D. The legally required life safety transfer and distribution equipment as well as the feeders shall reside in 2-hour rated emergency electric room/closet.

D5010 - EMERGENCY/STANDBY POWER SYSTEM

A. The emergency/standby generator shall be 500kW/650kVA, 277Y/480V, 3-Phase, 4-Wire, diesel generator with factory sound attenuated enclosure. The generator shall have a base-mounted integral fuel oil tank sized for 48-hours of back up.

B. A 200A automatic transfer switch shall be installed for the emergency life safety branch; a paralleling series 2000A automatic transfer switch shall be provided for optional standby branch.

C. The generator shall feed the life safety branch with a 200A-3P circuit breaker, the optional dual standby branch with 1000A-3P circuit breaker and the fire pump with 100A-3P circuit breaker.

D. The life safety transfer and distribution equipment as well as the feeders shall in 2-hour rated emergency electric room/closet. The life safety branch shall power egress and exit lighting, communications systems and the fire alarm system.

E. The optional standby transfer, distribution equipment and feeders shall be located in the main electric room. The standby branch shall provide back power for boilers and associated pumps, server room and telecommunications closets, selected kitchen loads and heating loads in the gymnasium and the cafeteria.

D5020 - LIGHTING

A. Interior Lighting System

1. A high efficiency lighting system shall be provided in all interior spaces as well as on the exterior of the building. The design aim is to deliver a lighting system with a light power density not exceeding 0.5W/sq. ft. Linear direct/indirect fixtures shall be LED; recessed fixtures shall be LED; exterior light fixtures shall be LED.
2. Interior lighting shall be controlled with an automatic control device to shut off building lighting in all spaces. This automatic control device shall function on either on a scheduled basis using a time of day operated control device that turns lighting off at specific programmed times; or an occupant sensor that shall turn lighting off within 30 minutes of an occupant leaving a space; or an unscheduled basis by occupant intervention.
3. Each space enclosed by ceiling-height partitions shall have at least one control device to independently control the general lighting within the space. Each control device shall be activated either manually by an occupant or automatically by sensing an occupant.
4. Each perimeter office space enclosed by ceiling-height partitions shall have a manual control to allow the occupant to uniformly reduce the connected lighting load by at least 50% or shall be provided with automatic daylighting controls.
5. Each perimeter classroom space shall have a manual control to allow the occupant to uniformly reduce the connected lighting load by at least 50% and shall be provided with automatic daylighting controls. The classrooms shall have the ability to dim or switch off lights at the presentation/teaching front wall. The lighting controls shall be integrated with the HVAC controls.
6. Egress lighting shall be provided in egress pathways, classrooms, bathrooms, assembly areas and outside each egress door.

B. Light Fixtures

1. All light fixtures shall be LED type.
2. LED modules shall include the following features unless otherwise indicated:
3. Comply with IES LM-79 and LM-80 requirements.
4. Minimum CRI 85 and color temperature 3000° K unless otherwise specified in LIGHTING FIXTURE SCHEDULE.
5. Minimum Rated Life: 50,000 hours per IES L70.
6. Light output lumens as indicated in the LIGHTING FIXTURE SCHEDULE.
7. LED drivers shall include the following features unless otherwise indicated:
8. Minimum efficiency: 85% at full load.
9. Minimum Operating Ambient Temperature: -20° C. (-4° F.)
10. Input Voltage: 120 - 277V (±10%) at 60 Hz.
11. Integral short circuit, open circuit, and overload protection.
12. Power Factor: ≥ 0.95.
13. Total Harmonic Distortion: ≤ 20%.
14. Comply with FCC 47 CFR Part 15.
15. Installation shall meet requirements of manufacturer's recommendations and the additional requirements for "Severe Seismic Disturbance" contained in ASTM E 580. Fixture support wires shall conform to ASTM A 641/A 641M, galvanized regular coating, soft temper

D5020 - WIRING

A. Provide wiring and connections for special outlets where required. All homerun circuits must contain no more than 3 phase conductors.

1. Conductors: Copper. Comply with NEMA WC 70.
2. Conductor Insulation: 90 degree rated; Comply with NEMA WC 70 for THHN, THWN-2 and XHHW-2.
3. Multi-conductor Cable: Comply with NEMA WC 70 for metal-clad cable, Type MC with ground wire.
4. Emergency System Feeders: Emergency System Feeders: Mineral-insulated, metal-sheathed cable, Type MI.
5. Conductor insulation and multi-conductor cable applications and wiring methods
6. Service Entrance: Type XHHW-2, single conductors in raceway.
7. Exposed Feeders: Type THHN-THWN-2, single conductors in raceway.
8. Emergency System Feeders: Mineral-insulated, metal-sheathed cable, Type MI.
9. Feeders Concealed in Ceilings, Walls, Partitions, and Crawlspaces: Type THHN-THWN-2, single conductors in raceway; Metal-clad cable, Type MC.
10. Feeders Concealed in Concrete, below Slabs-on-Grade, and underground: Type THHN-THWN-2, single conductors in raceway.
11. Exposed Branch Circuits, Including in Crawlspaces: Type THHN-THWN-2, single conductors in raceway; Metal-clad cable, Type MC.
12. Branch Circuits Concealed in Ceilings, Walls, and Partitions: Type THHN-THWN-2, single conductors in raceway; Metal-clad cable, Type MC.
13. Branch Circuits Concealed in Concrete, below Slabs-on-Grade, and Underground: Type THHN-THWN-2, single conductors in raceway.
14. Cord Drops and Portable Appliance Connections: Type SO, hard service cord with stainless-steel, wire-mesh, and strain relief device at terminations to suit application.
15. Class 1 Control Circuits: Type THHN-THWN-2, in raceway.
16. Class 2 Control Circuits: Type THHN-THWN-2, in raceway; Metal-clad cable, Type MC.

D5030 - DATA COMMUNICATIONS

A. The telecommunications cabling infrastructure shall follow the latest TIA standards. The utility company services shall be terminated in a telecommunications entrance facility (EF). Fire rated plywood backboards, grounding, equipment racks, 110-type punch down blocks, patch panels, conduit sleeves, and corridor cable tray system shall be provided in the EF, the telecommunications equipment room (TER) and the telecommunications rooms (TR). The pathway system, racks and equipment shall be sized for complete utilization of the service entrance cables and all voice and data outlets plus room for future growth. Voice and data outlets shall be provided in all administration areas and in the classrooms. Voice and data horizontal cabling shall be Category 6A, plenum, unshielded, twisted pair, 8 conductor copper cable from each jack to the nearest telecommunications closet. Each end of each cable shall be labeled, the cables shall be terminated in accordance with TIA-568-B configuration, and tested in accordance with TIA standards.

B. Classrooms:
1. Provide (3) data drops at each teacher workstation.
2. Provide (2) data drops at the media cart.
3. Provide (2) data drops at the touchscreen display.
4. Provide (2) data drops at the Wi-Fi access point.
5. Provide (1) data drop at the wall phone.
6. Provide (1) data drop at the clock.

C. Offices:
1. Provide (3) data drops at the workstation.
2. Provide (1) data drop at the clock.

D. Voice/data outlets shall be provided in multiple service floor outlets or fire rated poke-thru devices for equipment and appliances when the equipment is to be placed on worktables, counters, systems furniture, or cabinets that are not against fixed walls.

E. Backbone cables shall be provided between the EF, TER and each TR. Copper backbone cables shall be voice grade Category 5e non-plenum cable. The cables shall be tested in accordance with ANSI/TIA standards. Optical fiber cables shall be 24-strand (50/125µm) multimode laser optimized cable. Backbone cable between the high school and the new middle school shall be 24-strand single mode fiber. The cables shall be terminated in fiber optic patch panels at both ends. The circuits shall be tested for insertion loss at both ends at 1310 and 1550nm. High-resolution Optical Time Domain Reflectivity (OTDR) tests shall be performed on each fiber at one end.

F. The data communication equipment shall comprise of 10/100/1000 core and edge switches based on Extreme Networks. The switches shall be equipped with PoE and non-PoE 1-Gigabit copper Ethernet ports and 10-Gigabit fiber optic ports for connection between core and edge switches. The switches shall provide connection of a number of devices together (PCs, servers, printers, etc.) over a wired data system and control access to various parts of the network. The servers and storage farm shall be provided under the FF&E budget.

G. The Wi-Fi data communications equipment shall comprise of a controller and access points based on Extreme Networks. The access points shall provide wireless connection of a number of devices together (PCs, servers, printers, etc.) over a Wi-Fi network and control access to various parts of the network including 1.2 points per classroom and exterior locations for parent/student access.

D5030 - VOICE COMMUNICATIONS

A. The voice communications equipment shall comprise of a voice-over-IP (VoIP) telephone switching system, voicemail, distribution infrastructure, and telephone handsets. Telephone handsets shall be provided in each classroom, in each administration office, gym, and cafeteria.

B. The telephone system shall be integrated with the public address system so that the telephone handsets may be used for paging announcements.

C. Provide a handheld radio booster to extend the coverage range of radios used typically at during bus release times and other outdoor activity, and throughout the day; among the janitorial staff and the administration offices.

D5030 - AUDIO-VIDEO COMMUNICATIONS

A. Local sound systems shall be installed in the cafeteria, gymnasium and media center. The sound system shall be integrated with the fire alarm system so that the system is muted when the fire alarm system is activated. The sound systems in each area shall incorporate wireless microphones, CD player, blue-ray player and AM/FM tuner as well as two additional inputs.

B. A/V teaching tools in classrooms shall consist of a short-throw projection display integrated with the sound system. The projector shall incorporate DVD players, computers, incoming TV signals from a local teaching station or networked data drop.

C. A digital signage system shall be installed at the main corridor and in the cafeteria. The system shall be server based with multiple channels and capable of displaying different media content on a number of LCD TVs. The digital display to be provided as a part of base construction include the following:
   1. Main Corridor – (2) 42” Monitors, 1 serving digital signage, 1 serving Building Management System Display of Resource Use(interface to be provided as a part of Building Management System).
   2. Cafeteria- (2) 42” Monitors, 1 serving administration digital signage; 1 serving cafeteria menu digital signage
   3. Exterior – 20mm pixel pitch LED sign (2’10” x 7’10”) with browser-based interface will be provided (Similar to Focus V Series Full Color)

D. A desktop computer will be provided to the Owner as a part of the building management system and digital signage systems in the central administration area.

E. A projector and powered projection screen shall be ceiling mounted in the cafeteria.
   1. Integrate the projection system with the local sound system. Connect audio from projection system into the DSP, then loop out of the DSP and into the mixer.
   2. Furnish and install AV wall plates with the following connector and cabling connected to the projector and include signal amplifiers:
      a. HDMI + 3.5mm audio
      b. VGA + 3.5mm audio

D5030 - PUBLIC ADDRESS SYSTEM

A. The public address (PA) speakers shall be located in classrooms, administration areas, assembly areas and in public and common areas. The system shall provide the front office

with the ability to make announcements throughout the school premises, to a limited area, or to an individual classroom. A telephone handset in each classroom shall initiate a call to the front office. In the front office, the administrative staff can select whether they want to initiate or respond to a call via the classroom telephone handset, make announcements or play background music through the speaker. The system shall be capable of supporting multiple and simultaneous communications. An emergency call station shall be provided in each classroom; when activated, the call station shall initiate an emergency call to the front office.

B. The system shall comprise a master clock that controls and synchronizes the time on peripheral clocks located throughout the school. The clock system shall be integrated with the PA system. The clock system shall utilize the public address system to sound pre-programmed tones for class changes. Clocks shall be provided in classrooms, assembly areas and in administration areas.

C. The PA system shall be capable of initiating pre-recorded messages upon activation of user defined emergency buttons (intruder alert, lock down, all clear, etc.) located in the administration area. The emergency buttons shall be integrated with the access control and intrusion detection systems.

D5030 - IN-BUILDING CELLULAR AMPLIFICATION SYSTEM

A. Provide an in-building cellular amplification system to boost cellular signals throughout the building.

B. Basis of design shall be Wilson Pro. The system shall include but not limited to cell amplifiers, external antennas, internal antennas, lightning protection and cabling.

C. The system shall provide cellular coverage to a minimum 95% of the building area.

D5030 - PUBLIC SAFETY RADIO DAS

D. The building shall be both pre and post tested for fire and police department radio signal strength. At the request of this subcontractor, a test shall be scheduled with the Fire Department. This subcontractor shall employ the services of an integrator to perform the fire/police department radio signal strength. Any expense incurred by the test shall be the responsibility of this subcontractor.

E. The integrator shall have experience in the design and installation of Public Safety Systems and is expected to perform a site survey to determine the RF signal strength on or near the building grounds to determine the level of amplification necessary to provide clear and reliable radio communications over 95% of the overall area inside the building.

F. The radio test shall check the signal reception in several locations on the floor area. Signal strength shall be as required for clear reception throughout the building utilizing the type of hand-held radio unit that is used by the Fire and Police Departments.

G. The DAS components include: Bi-Directional Amplifiers (BDA), Donor Antennas, Coverage Antennas, Coax Cable, Coax Connectors, Splitters, Combiners and Couplers.

H. Alarming: The BDA shall include the following outputs which shall interface to the fire alarm system. The integrator shall coordinate the installation of this alarm with the fire alarm

contractor: Signal booster malfunction alarm, Loss of AC Power Alarm, Low Battery Alarm, Antenna Circuit Malfunction, and Charge Failure Alarm.

D5030 - ACCESS CONTROL SYSTEM

Refer to APPENDIX II – SECURITY NARRATIVE AND CUT SHEETS

A. Proprietary Information
   1. Manufacturer: HID

B. Access Control System: Fully integrated system, which will include card readers and audio/ video intercoms, electric locking devices, request to exit switches, door release buttons, electromagnetic door holders, lockdown buttons, audible alarms, automatic door operators, lock power supplies, equipment enclosures, tamper switches, credentials, credential printers and credential cameras.

   1. The system monitors and controls all access of the perimeter doors.
   2. The access control system will interface with the video surveillance system and intrusion detection system.

C. Card readers: Installed on all doors requiring access control.

D. Electric Locking Devices: Electrified door hardware for card reader-controlled doors will include electrified locksets, electrified hinges, electric exit devices, and electric power transfers.

E. Request to Exit Devices (REX): The request to exit device will shunt the alarm initiated from the door contact upon egress. Shunting of the alarm will be accomplished by connection of the REX to an appropriate input on the field control panel. This input will be programmed to shunt the door contact upon activation of the REX device.

F. Door Release Button: The door release button, when activated, will trigger an event in the access control system, which will unlock the associated door.

G. Electromagnetic Door Holder: Each electromagnetic door holder will be configured to be de-magnetized upon activation of the lockdown button and intrusion detection system. Magnetization will not occur until reset by either system.

H. Lockdown Button: The lockout button, when activated, will trigger an event in the access control system, which will lock all electrified doors, disable the card readers and any door release functions. Cards of security personnel will continue to work on the locked-out readers during a lockout situation. The lockdown button, when activated, will cut power for electromagnetic door holding magnets. Magnets will remain de-energized until reset.

D5030 - INTRUSION DETECTION SYSTEM

Refer to APPENDIX II – SECURITY NARRATIVE AND CUT SHEETS

A. Intrusion Detection: The system will consist of door position switches, motion detection and duress buttons.

   1. This system will be fully integrated with the access control system.

B. Door Position Switch (DPS): The DPS at all doors serve to indicate the open/closed status of the associated door and will establish the basis for reporting a door-propped or unauthorized entry condition.

C. Motion Detector: Will be dual technology, combining a PIR and a microwave sensor located in hallways and first floor rooms with windows.

D. Duress Buttons: Installed at predetermined locations to alert emergency officials of any emergency.

D5030 - VIDEO SURVEILLANCE

Refer to APPENDIX II – SECURITY NARRATIVE AND CUT SHEETS

A. Proprietary Information
   1. Video Management System (VMS) Manufacturer: Genetec
   2. Camera Manufacturer: Axis

B. Video Surveillance: A new IP-based system will be provided to perform fixed video surveillance, assessment, monitoring, and recording operations. The system will be capable of integrated operations with other security related systems such as the access control systems for alarm call-up and event assessment at all remote workstations.

   1. IP-based system will allow for remote viewing and control by administration.

C. The Video Management System (VMS) shall be full featured with client software applications intended for:

   1. Live video monitoring
   2. Real-time alarm monitoring and display
   3. Alarm display prioritization
   4. Automatic License Plate Reader (ALPR) technology
   5. System management
   6. Instantaneous retrieval of archived video
   7. Evidence production on AVI files that can be viewed on any PC
   8. Export of tamper evident video on recordable CD's or DVD's.

D. The VMS shall be capable of integrated operation with other security related systems such as the Access Control Systems (ACS) for alarm call-up and event assessment at the Security Command Center and at all remote Workstations.

E. Network Video Recorder (NVR): The NVR will provide storage of all cameras using the following criteria:

   1. 30-day video storage retention.
   2. All cameras using H.264 compression.
   3. Interior fixed and cameras: Record HDTV 1920x1080 with H.264 compression @ 5 images per second when no motion is detected and 15 images/second when motion is detected.
   4. Exterior cameras: Record HDTV 1920x1080 with H.264 compression @ 5 images per second when no motion is detected and 15 images/second when motion is detected.
   5. Motion triggered recording:

      a. Assume that motion will be detected 50% of the day.

b. Motion detection will be configurable by camera and schedule to mitigate nuisance triggers.
c. Record video as specified herein when motion is detected.
d. Record video as specified herein when no motion is detected.

F. Cameras: The cameras will provide video surveillance, assessment, and visual alarm monitoring of selected interior and exterior access doors as well as other critical areas.

1. Cameras will be IP based fixed and multi-lens.
2. Exterior cameras will have lightning protection.

D5030 - VIDEO ENTRY SYSTEM

Refer to APPENDIX II – SECURITY NARRATIVE AND CUT SHEETS

A. Proprietary Information
1. Manufacturer: Axis

B. The video intercom system will be capable of having multiple control units and/or IP direct masters and audio video door stations.

C. All exterior communication equipment will have lightning protection.

D. Installed separately from conventional general-purpose internal communications systems, the system will be used as a video door entry system, emergency announcement system, rescue assistance system, urgent call system, public announcement system, and access control system as scheduled, indicated or required.

E. The system will have the ability to roll over any video intercom door station call to any video intercom master station within the complete system. This system functionality will be flexible and configurable by system programming and not rely upon physical wiring connections.

F. The system will include remote door unlocking capability from the master station.

G. Will include a full range of control unit functions, including basic conversation, will be capable: call forwarding, scan monitoring, emergency call, priority call, video audio recording, paging, and zone paging as scheduled, indicated or required.

D5050 - LIGHTING CONTROLS

A. The lighting control system shall be digitally addressable.

B. Input Devices: occupancy sensors, daylight sensors, multi sensors (combined daylight, occupancy and temperature), wall mount switches and dimmers.

C. End Devices: LED drivers, field addressable relays, relay panels, dimming modules.

D. Control Equipment: lighting control panels, touch screens, server with database and end-user application(s).

E. All building light fixtures shall be controlled by the lighting control system.

D5090 SPEECH REINFORCEMENT SYSTEM

A. A speech reinforcement system shall comprise of a wall-mount speaker, pendant style teacher microphone, remote microphone and media connector. The system shall be installed in all classrooms and media center.

B. The speech reinforcement system shall be integrated with the classroom projector to amplify sound.

C. The speech reinforcement system shall be integrated with the public address system and the fire alarm system to mute in the event of a page or alarm.

D. Basis of Design shall be Lightspeed™ *Topcat Access*™ classroom audio, *Activate System*™ small group audio pods and

D5090 FIRE ALARM SYSTEM

A. The design of the fire alarm system shall be based on engineering criteria as defined by NFPA 72 and The Massachusetts State Building Code 780 CMR. The system shall be supported by standby batteries. The batteries shall support 24-hours of full supervisory operation followed by 15 minutes of alarm.

B. A combination audible-visual signaling appliances as required per NFPA 72 shall be provided. The audible-visual notification devices shall be located in all egress pathways, classrooms, public and common areas. Visual notification devices shall be provided in all offices. The devices shall be in compliance with the Americans with Disabilities Act (ADA).

C. Manual pull stations shall be located within 5 ft. of each means of egress and mounted at 44 in. above the floor to the activating lever of the box. The pull stations shall mechanically latch upon operation and remain so until manually reset by a key common to all system locks.

D. Photoelectric smoke detectors shall be located in egress pathways. Smoke detectors shall also be located at the top, bottom of each stairway; mechanical equipment; electrical; transformer; telephone equipment; elevator machine; or similar room. Sprinkler tamper and flow devices shall be wired for trouble and alarm indication respectively into the fire alarm control panel.

E. The fire alarm panel shall include a communications interface to the smoke control panel.

F. Control/Monitor Modules shall be added to a smoke control system to monitor on/off status of smoke exhaust fans and open/closed position of smoke dampers and smoke louvers.

D5100 - SITE ELECTRICAL GENERATION

A. Provide conduit infrastructure (only) for a future Roof-Mounted Photovoltaic (PV) to the Main Electrical Room via a capped conduit sweep for a future ground-level exterior-mounted emergency PV disconnect.

D5110 - GROUNDING SYSTEM

A. Comply with UL 467.

B. Grounding Conductors: Route along shortest and straightest paths possible, unless otherwise indicated or required by Code. Avoid obstructing access or placing conductors where they may be subjected to strain, impact, or damage.

C. Ground Rods: Drive rods until tops are 2 inches (50 mm) below finished floor or final grade, unless otherwise indicated.

D. Interconnect ground rods with grounding electrode conductor below grade and as otherwise indicated. Make connections without exposing steel or damaging coating, if any.

E. For grounding electrode system, install at least three rods spaced at least one-rod length from each other and located at least the same distance from other grounding electrodes, and connect to the service grounding electrode conductor.

F. Bonding Straps and Jumpers: Install in locations accessible for inspection and maintenance, except where routed through short lengths of conduit.

G. Bonding to Structure: Bond straps directly to basic structure, taking care not to penetrate any adjacent parts.

H. Bonding to Equipment Mounted on Vibration Isolation Hangers and Supports: Install so vibration is not transmitted to rigidly mounted equipment.

I. Use exothermic-welded connectors for outdoor locations, but if a disconnect-type connection is required, use a bolted clamp.

J. Grounding and Bonding for Piping:

1. Metal Water Service Pipe: Install insulated copper grounding conductors, in conduit, from building's main service equipment, or grounding bus, to main metal water service entrances to building. Connect grounding conductors to main metal water service pipes, using a bolted clamp connector or by bolting a lug-type connector to a pipe flange, using one of the lug bolts of the flange. Where a dielectric main water fitting is installed, connect grounding conductor on street side of fitting. Bond metal grounding conductor conduit or sleeve to conductor at each end.
2. Sprinkler Service Pipe: Install insulated copper grounding conductors, in conduit, from building's main service equipment, or grounding bus, to main sprinkler service entrances to building. Connect grounding conductors to sprinkler service pipes, using a bolted clamp connector or by bolting a lug-type connector to a pipe flange, using one of the lug bolts of the flange. Where a dielectric main water fitting is installed, connect grounding conductor on street side of fitting. Bond metal grounding conductor conduit or sleeve to conductor at each end.
3. Use braided-type bonding jumpers to electrically bypass water meters. Connect to pipe with a bolted connector.
4. Bond each aboveground portion of gas piping system downstream from equipment shutoff valve.

K. Bonding Interior Metal Ducts: Bond metal air ducts to equipment grounding conductors of associated fans, blowers, electric heaters, and air cleaners. Install bonding jumper to bond across flexible duct connections to achieve continuity.

L. Grounding for Lightning Protection System: Install 3/0 AWG copper grounding conductor, in conduit, to the building's main service equipment.

D5120 - LIGHTNING PROTECTION SYSTEM

A. Not in scope.

D5130 - POWER SYSTEM STUDIES

A. Perform coordination study using approved computer software program. Prepare a written report using results of fault-current study. Comply with IEEE 399.

1. Prepare short circuit, selective coordination and arc flash studies.
2. Calculate the maximum and minimum 1/2-cycle short-circuit currents.
3. Calculate the maximum and minimum ground-fault currents.
4. Comply with IEEE 241 and IEEE 242 recommendations for fault currents and time intervals.
5. Comply with IEEE 1584 for performing Arc Flash Hazard Calculations.

D5140 - POWER MONITORING

A. The electrical power monitoring meter shall calculate the electrical usage of electrical loads with the use of remote current transformers. The meter shall be microprocessor-based. The meter shall be capable of sampling each power waveform calculating power factor and harmonic content to achieve 0.5% accurate readings. The meter shall save the Kilowatt hour and Max demand readings, indefinitely, in non-volatile RAM during power outages, without the use of batteries until, at such time, the meter is re-energized.

B. The meter shall contain Modbus RS485 RTU communications as a standard feature. The meters' communication wires to be Daisy Chain, Parallel, and Star wired together then connected to a RS485 / RS232 converter, which then connects to the PC. Up to 255 meters shall be connected together, on a two-wire buss, to be read by software in the PC. The software package shall allow the end-user to manually or automatically read the meters.

C. The software shall display power consumption data for each panel being monitored, total lighting load, computer power load, general purpose power load, elevator, HVAC load and total building load.

E EQUIPMENT AND FURNISHINGS

E10: EQUIPMENT

E1030 – Commercial Equipment

The facility shall include all the necessary components of a functional kitchen to include a receiving area to be used as a staging point for the breakdown and distribution of delivered goods. Refrigerated rooms for the bulk storage of refrigerated and frozen products are to be offered and sized to accommodate the needs of the facility. Dry goods storage shall also be made available for the keeping of canned, boxed, and other non-refrigerated food items. Food grade storage shelving and dunnage platforms shall be provided for dry goods storage. In addition to dry food storage, a separate bulk paper goods storage room will be made available for storage of disposable items like plastic utensils, foam serving trays, and other paper related items.

Food preparation shall take place on stainless steel tables of various sizes and configurations. Tables may be fashioned with sinks, drawers, shelves, and overhead pot storage hooks. Motorized food preparation equipment such as a food slicer, food cutter, and mixer shall be provided. Sizing of this equipment will be based on the scope of food preparation as many purveyors now sell pre-prepared ingredients that are pre-washed and sliced.

Cooking shall take place in a central location adjacent to both food storage and preparation. Equipment shall consist of standard pieces such as convection ovens, boiling kettles, braising pans, steamers, and open burner range tops. Adjustments shall be made to cooking equipment to suite the specific menu.

The facility will include the necessary ware washing equipment to process ware, pots, trays, and pans.

Other support facilities located in the kitchen will include a staff toilet and a dedicated kitchen slop sink with enough space for the storage of mops, buckets, and detergents. Typically grouped with this equipment are employee locker accommodations for the storage of personal items like coats, handbags, or shoes.

Equipment that is required includes:

- 60-quart mixer, 20-quart mixers, automatic food slicer, food processors, and a buffalo style food chopper.
- The kitchen must be provided with a mechanical means to wash ware and to sanitize area with a 180-degree rinse process.
- Walk in cooler and freezer, storage shelves, and mechanical refrigeration system.
- Dry storage shelving, can storage racks, and transport work carts.
- Prep tables with sinks, over shelves, and utility connection points.

- Mobile worktables, speed rack for sheet pans, and dunnage platforms for storage.
- Cooking equipment will consist of convection ovens, range top, steamer, braising pan, and kettle.
- Serving equipment will consist of counters, sneeze guard, cold pans, hot pans, display shelves, and chest style milk coolers.
- Miscellaneous kitchen equipment will consist of reach in refrigerators, hot food holding cabinets, and electrical drop cords.

Refer to APPENDIX IV – FOOD SERVICE EQUIPMENT LIST AND BUDGET

E1090 – Other Equipment

- Commercial / Residential appliances including: refrigerators, microwave ovens, dishwashers.
- Electric operated Displays at Classroom teaching walls.
- Projection Screens: Electrically operated projection screens with standard reflective fabric facer. Screens will be provided at the following locations.
    - Cafetorium
    - Gymnasium
    - Media center.
    - Kiln in Workroom 236.
    - Telescoping bleachers Gym 163.
    - Powered window shades in Cafetorium 117.
    - Instrument storage.

E1070 - ENTERTAINMENT AND RECREATIONAL EQUIPMENT

The platform will be provided with manually operated curtains matching valance and Leg and borders to mask the stage wings.

Stage lighting will be provided by red, blue and green colored light fixtures provided with dimmers and mounted to the ceiling in front of the stage proscenium in the cafetorium.

ATHLETIC EQUIPMENT

- 6’ high Polyurethane Foam Heavy Duty wall pads around entire perimeter.
- Scoreboard.
- Gym Divider curtain, manually operated.
- Basketball Hoops: (2) main and four (4) adjustable side hoops, power operated.
- Retractable bleachers, 100 lineal feet to seat approximately 227.

E20: FURNISHINGS

E2010 – Fixed Furnishings

- Aluminum recessed interior foot grilles and frames in vestibules, and recessed floor mats and frames at entrance corridors.
- Manual and motorized operated window shades solar shading at typical locations and black-out type.
- Performance curtains and rigging at Platform.
- Portable risers in Music and Chorus Rooms.

E2030 – Manufactured Casework

- Custom fabricated Casework: Wood cases fabricated to AWI Premium Grade standards. Base cabinets, Wall cabinets, Open shelves and Cubbies maple veneer on 3/4" plywood with solid maple edge banding, clear finish. All countertops to be of solid surface material.
- Solid surface window sills and stools.

E2050 - Moveable Furnishings

- All moveable furnishings, such as classroom desks, cafeteria chairs and tables, musical instrument storage cabinets, and office furniture, will be provided by the District under a separate Furnishings, Fixtures and Equipment budget.

F SPECIAL CONSTRUCTION AND DEMOLITION

F20: SELECTIVE DEMOLITION

F2010 – Building Demolition

- Demolish existing building and foundations.
- Protect existing site improvements and other features to remain.

F2020 – Hazardous Components Abatement:

- Refer to existing hazardous materials report.

G BUILDING SITEWORK

G10: SITE PREPARATION

G1010 – Site Clearing

- Tree & shrub vegetation clearing and grubbing removal as required accommodating new construction shown on Drawings.

G1020 - Site Elements Demolition

- Sawcutting and removing asphalt paving and concrete pavement, removal, demolition and salvage of site improvements as required to accommodate new construction shown on Drawings.
- Tree protection along the edge of clearing and saved trees. Fencing to be 6' galvanized chain link or approved substitute.
- Furnish, install and maintain erosion & sedimentation controls, temporary swales, and siltation basins in accordance with DEP best management practices.
- Protection of existing Trees and Vegetation: Protect existing trees and other vegetation indicated to remain in place, against unnecessary cutting, breaking or skinning of roots, skinning or bruising of bark, smothering of trees by stockpiling construction materials or excavated materials within drip line, damaging heat from paving equipment, excess foot or vehicular traffic, or parking of vehicles within drip line. Provide temporary guards, fencing or any other necessary precautions to protect trees and vegetation to remain.
- Water trees and other vegetation to remain within limits of contract work as required and maintaining their health during the course of construction operations.
- Repair trees and vegetation indicated to remain that are damaged by construction operations, in a manner acceptable to the Architect. Employ a licensed arborist to repair damage to trees and shrubs.
- Replace trees and vegetation that cannot be repaired and restored to full-growth status, as determined by a licensed arborist.
- Sawcutting, asphalt and concrete pavement removal, demolition and salvage of site improvements such as curbing, fencing, furnishings, as required to accommodate new construction shown on Drawings. Topsoil stockpiling (annual seed for stabilization).

G1037 – Erosion Control

Provide labor, materials, and equipment necessary to complete the work of this Section, including but not limited to the following:

- Control measures to prevent all erosion, siltation, and sedimentation of wetlands, water ways, construction areas, adjacent areas, and offsite areas.
- Control measures shall be accomplished at all areas subject to erosion adjacent to or in the following work areas:
  - Soil stockpiles and onsite storage and staging areas.
  - Cut and fill slopes and other stripped and graded areas.

- Constructed and existing swales and ditches.
- Existing and proposed drain inlets, including catch basins, area drains, and trench drains.
- At the edge of the project area/limit of work.

- Additional means of protection shall be provided by the Contractor as required for continued or unforeseen erosion problems, at no additional cost to the Owner. The Contract Drawings indicate the minimum requirements for erosion and sedimentation control. The Contractor shall install all measures needed to control sediment and erosion as required by the Contractor's and Subcontractor's construction methods and operations, the weather conditions, and as directed by the Engineer.

- Periodic maintenance of all erosion and sediment control measures shall be provided to ensure intended purpose is accomplished. Erosion and sedimentation control measures shall be in working condition at the end of each day.

- After any significant rainfall (0.25 inches), erosion and sediment control measures shall be inspected for integrity. Any damaged measures shall be corrected immediately.

- Removal of all erosion and sediment control measures after the completion of work and the establishment of lawns and plantings.

G20: SITE IMPROVEMENTS

G2010 – Roadways & G2020 Parking Lots

- Vertical Granite Curb (VGC): type VA4, light gray color, free from seams and other structural imperfections, minimum length shall be 6 feet unless otherwise indicated.

- Radial Curb: Type VA4 shall be used on all curves with a radius of 100' or less, where vertical granite curb is indicated

- Vertical to Flush Transition Curb: Furnish vertical to flush transition curbs of same material as adjacent curb where shown on the drawings, to taper the reveal of the reveal of the curb from 6 inches to 0 inches. Transition curb along a curve shall be of the same radius. The curb shall be manufactured for the purpose intended at the plant and shall not be field cut.

- Bituminous Concrete Paving: 12 inch compacted gravel borrow, min. 2-1/2 inch binder course, 1-½ inch top course type i-1

- Bituminous Curbing – Berms shall consist of Class I Bituminous Concrete, Type I-1, Top Course conforming with the Job-Mix Formula given in Section M, paragraph M3.11.03, SSHB and in accordance with the details of design as shown on the Drawings.

- Pavement Markings: Reflectorized traffic paint. 2 component epoxy adhesive at perimeter firelane. Acrylic traffic paint at handicapped markings and drop off zones.

- Vehicular Concrete Paving: medium broom finish 6" depth w/ reinforced welded wire mesh, 12 inch compacted gravel borrow.

- Regulatory Parking Signs, reflectorized aluminum, galvanized steel sq. post.

- Concrete Rumble Strip – 6" reinforced vehicular concrete with textured surface.

G2030 – Pedestrian Plazas and Walkways

- Concrete Unit Pavers: Basis of Design: Specialty Promenade Plank Pavers by Unilock (www.unilock.com) Pavers in 2 sizes: 4 x 16 and 8 x 24, Contact: Daniel Neviackas (Daniel.neviackas@unilock.com, 508-341-4306)
- Concrete Paving: 6-inch Gravel Borrow for Aggregate Base complying with MHD Specifications Section M1.03.0 Type "B", 4-inch (minimum) poured-in-place air-entrained, 5,000 psi at 28 days concrete. Concrete Sidewalks shall be a minimum of 6-feet wide. Medium broom finish 4 inch depth, 8 inch compacted or structural fill. Expansion joints 30 ft. o.c.,sawn control joints 10 ft. o.c.

  Concrete pavement types:

  - Cast in place sidewalk pavement, plain gray concrete.
  - Cast in place sidewalk pavement with integral color with exposed aggregate.
  - Cast in place sidewalk pavement with integral color without exposed aggregate.
- Bituminous Concrete Paving: 8 inch compacted gravel borrow, min. 1 1/2 inch binder course, 1 inch top course type i-1
- Accessible Curb Cuts with Detectable Warnings: MAAB/ADA compliant, pedestrian concrete paving with 2 ft. wide vitrified polymer composite cast in place detectable warning with truncated domes
- Stone Dust Paving: on 12" compacted gravel borrow. Min 2" thick compacted stone dust. Stabilizer additive
- New England Irregular granite flagstone, variable sizing, approx 1-2" thickness x +/-24" x +/-30". 6" Gravel base with ½" – 1" stabilized stone dust joints

G2050 – Athletic, Recreational, and Playfield Areas

- Baseball and Softball:
  - Engineered infield mix consisting of 4" depth engineered infield mix a blend of 72% Sand; 12% Silt; 16% Clay. Pitchers mound and batters boxes shall include reinforced mound clay. Bases and plates shall be NFHS. Basis of design DuraEdge Classic.
  - Backstop - Black-vinyl coated chain link fence. With steel support posts.
  - Bleachers: Galvanized angle frame structure with extruded aluminum seating, risers and decking. Chainlink perimeter guard. Wheelchair accessible seating in conformance with MAAB & ADA. Securely erected and surface-mounted to reinforced concrete pad. Basis of design GT Grandstands.
  - Foul poles – 4" dia. powder coated steel 15' ht with mesh wing. Basis of design Sportsfield Specialties.
  - NFHS compliant breakaway bases, pitching and home plate.
  - Team benches: natural aluminum finish seating with galvanized supports, double wide plank with backs and surface mounted to concrete surface.

- Tennis
    - Tennis Posts and Net: NFHS compliant net posts, powder coated steel, and net with tightening and tie down system
    - Sports Surfacing Color Sealcoat with Line Striping: Acrylic/sand textured court color sealer. 2 colors. Basis of design Nova Sports.
    - Tennis mesh windscreen with printed graphics. Basis of design Sportsfield Specialties.
- Basketball
    - Basketball Posts and Goals: 6 ft. Gooseneck galvanized steel post with polycarbonate board.
    - Basketball Sports Surfacing Color Sealcoat with Line Striping: acrylic/sand court color sealer. 2 colors. Basis of design Nova Sports.
- Synthetic Turf Field
    - Rubber/Sand Infilled Synthetic Turf Sports Field – Organic infill (Basis of design Brockfill), rounded silica sand, 2" polyethylene slit film / monofilament fibers, permeable backing with dimensional stability layer. Shock pad basis of design Brock SP17 or equal. Perimeter reinforced cast in place concrete turf edger. Open graded base stone layer with top stone choker course. Herring bone flat drain system with collector drains. Filter fabric over entire subgrade. Tufted/inlaid field markings.
    - Football Goal Posts: NFHS 8' Gooseneck football goal posts (pair) with baseplate and anchor bolts. Access frame system. Basis of design Sportsfield Specialties.
    - Portable Soccer Goals: Full size NCAA/NFHS regulation portable goals with net and sand bag anchors. Basis of design Sportsfield Specialties.
- Track and Field
    - Perimeter drain Aco 3000 radiused slot drain or equal. At D-zone only.
    - Track surfacing. Paved in place 1/2" permeable urethane surfacing on asphalt paving. Polyurethane binder base with SBR rubber granules, multi sprayed pigmented polyurethane EPDM granules, colored structural spray finish surfacing.
    - Shot put concrete pad, toe board and stonedust throwing sector with recycled plastic timber edging.
    - Discus concrete pad, cage and net. NFHS compliant. Basis of design Sportsfield Specialties.
    - Long Jump Pits: Modular forming system and vinyl pit covers, Basis of design Sportsfield Specialties.
- Scoreboards: Basis of design Daktronics LED Multi-sports Scoreboard with remote controller. 4' HT x12' Length.

G2060 – Site Development

- Standard Site Furnishings: The basis of design for ALL standard site furnishings is Landscape Forms (www.landscapeforms.com) Contact: Nadene Worth (nadanew@landscapeforms.com)
    1. 10 Backed Metal Bench: Model "Scarborough Bench" in 6 feet length
    2. 4 Backless Metal Benches: Model "Scarborough Bench" in 6 feet length
    3. 5 Socrate Bench in 95" Length: Backless Precast Concrete Seat Blocks in Acid Finish in color "Beige"
    4. 6 Backless Recycled Plastic Benches: Model Harvest Bench in 8 feet length
    5. 7 Cantilevered Wall Mounted Wood Slat Benches: Model "Harpo" in 6 feet length
    6. 4 Backless Metal Café Table/Chair: Model "Parc Center Table" in 28" square (Qty 4) and "Parc Center Armless Chair" Qty (8)
    7. 5 Picnic Table and Benches: Model "Harvest Dining Height Table and Benches"
    8. 6 Bike Racks: Model "Key Bike Rack"
    9. 6 Trash Receptacles: Model "Petosky Litter" in 30 Gallons
    10. Ornamental Vehicle Security Bollards: Model "Annapolis" 6" embedded

- Playground Equipment
    - (Ages 2-5)
        - Basis Of Design is Landscape Structures (www.landscapestructures.com) Contact: Brian Iafolla (brianiafolla@obrienandsons.com); 800-835-0056
            1. Primary Climbing Structure as shown in the drawings
            2. Topsy Turny Spinner (Model 205800)
            3. Oodle Swing (Model 173592)
            4. 5000 Series 4 Bay Swing 10 Ft High (Model 177324)
    - (Ages 5-12)
        - Basis Of Design is Berliner (www.berlinerplayequipment.com/us) Contact: Margie Salt (msalt1@verizon.net) 978-664-0239
            1. Greenville Tower 5 (USP03795) – Main Tower Only
            2. Net Swing
    - Playground safety surfacing – Poured in place rubber granules, 3-5 inch depth, SBR rubber basemat with ½" EPDM Wearing course, multi-color combinations.
    - Playground safety surfacing – engineered wood fiber, 12" depth
    - Gagaball pit: 24" HT Octagon, constructed of ACQ southern yellow pine with powdered coated steel corner brackets. ADA doorway kit.
    -

- Site Improvements:
    - Fieldstone Freestanding Walls: Basis of Design is "Natural Stonewall Solutions" engineered and prefabricated prior to shipment (www.naturalstonewallsolutions.com). Stone

shall be “Flat New England Blend Granite”.

- Curved Concrete Walls – Factory custom precast with integral color
  - The height of the wall shall be 16” and the width shall be 18”
  - Medium Grey Integral Color with Exposed Fine Grain Texture Finish
  - Source: Northern Design Precast (www.ndprecast.com)

- Reclaimed (Not from site) Granite Blocks Bench Grade: Salvaged New England granite blocks shall be around 18” height and vary in lengths from 3 to 5 feet. (www.stonefarmliving.com)
- Reclaimed Granite Curbs: The reclaimed granite curbs shall be placed in landscape areas in a stepped manner for casual seating. Dimensions (16-18” x 6-8” W x 4’ L). (www.stonefarmliving.com)
- Standard Garden Shed
  - Metal seam Roof with Solar Panels, corrugated Polycarbonate Sliding, 2x4 wood framing. Plywood flooring.
- School Garden Planters
  - Material: ACQ PT timber construction with composite cladding and Cap.Finish: Trex Transcend Wood Grain in Premium Texture/Color
- Sensory Garden Path
  - Shall be a custom pathway with 4 dividers (granite) and edger (granite) showcasing 4 different type of materials. End of path to include educational sign on post. Sign to be 3’x2’ fiberglass panel with frame.

- Flag Pole: 40 ft. ht., fiberglass with internal halyard and integrated LED light.
- Custom Steel Fence – 3’ HT. Powder coated sq. steel posts with custom laser cut panels.
- Pipe rail – Galv steel tube railings
- Chainlink Fence & Gates: black vinyl coated, thermally fused. 6 gauge mesh.
- Concrete Filled Steel Bollards: schedule 40 steel pipes, hot-dipped galvanized, concrete filled, welded steel cap, painted black, with 2 inch wide reflective adhesive bands at service areas.
- Cast In Place Reinforced Concrete Retaining Wall - 12” width x 6-8’ height, frost footing , formliner finish.
- Segmental Retaining Walls: Large size concrete block wall units with patterned finish and caps, non-geogrid gravity wall design with drainage stone backfill and anchoring as needed. Basis of Design: RediRock Retaining Wall System
- Hot dipped galvanized steel vehicular barrier gate shop welded. Square tubing construc-

tion with lockable latch post.

- School Sign, Front: 4'x8' x 12" monolithic granite sign with aluminum attached lettering. Mounted to concrete frost footing. 2-sided, illuminated with uplights.
- Drinking Fountains: powder coated steel Outdoor drinking fountains where indicated. Basis of design: MDF fountains. (2) total.
- Chalkboard – aluminum framed 1/2" thick premium porcelain chalkboard 6'x12' mounted to exterior building wall.
- Trench Drain at front plaza – custom radial segment sloping trench drain with stainless steel custom ADA grate Basis of design: Duratrench.
- Stepped Stone Swale – Stepped wier system shall be constructed of reinforced precast concrete. Swale shall be boulder lined to accept roof drainage outlet pipe.
- Raised Decking and Boardwalk
  - Composite Wood decking with pressure treated wood framing and posts. Sono-tube concrete footings.
  - Basis of Design Trex transcend Decking (www.trex.com) Decking in wood grain finish in premium "Tree House" Color

G2080 – Landscaping

- Topsoil at natural grass sports fields shall be sand-amended native topsoil with minimum 80% sand. Coarse to medium sand shall be 60% or greater. Silts and Clays less than 10%. 8" depth. Minimum 6 inches per hour hydraulic conductivity.
- Sand layer blanket at sports field shall be coarse to medium sand, installed at 8" depth prior to topsoil placement.
- Seeded Lawn at Sports Fields: Premium quality Kentucky Bluegrass blend with high sand content soil based root zone. Maintenance period: Minimum 90 days after approved installation includes fertilizer, mowing, watering, pest control, aeration.
- Topsoil at planting and lawn areas: fertile, friable, natural, sandy loam, amend existing topsoil to meet organic and ph requirements. 6 inch depth min.
- Seeded Lawns: Premium quality 50-30-20 Kentucky Blue Grass/Fescue/Perennial Rye. Maintenance period 90 days after germination includes fertilizer, mowing, watering, weed killer, aeration, reseeding.
- Low-mow Fescue: Premium quality Fescue mix. 5 or more species shall be included in the mix. Mix to contain annual rye for erosion control. Maintenance period 90 days after germination includes fertilizer, mowing, watering, weed killer, aeration, reseeding.
- Detention Seed mix to contain a mix of mostly grasses and some wildflowers designed to be short and low maintenance. Maintenance period 90 days after germination includes fertilizer, watering, weed killer, aeration, reseeding.
- Erosion Control Mats on all slopes 3:1 or greater.
- Stabilized Lawn Shoulder: 8" Topsoil reinforced with polyethylene fibers, basis of design fibersoils.com. 12" gravel borrow base.
- Irrigation for sports fields shall include youth soccer fields west of the building using the existing well. The softball field and baseball field will require irrigation from a water source for the fields will fed through a separate meter and backflow preventer from the municipal water supply.

G30: SITE CIVIL UTILITIES

G3010 – Water Supply

Provide labor, materials, and equipment necessary to complete the work of this Section, including but not limited to the following:

- Installation of ductile iron pipe, fittings, accessories, and appurtenant work, at the locations and to the lines and grades indicated on the Contract Drawings;
- The installation of hydrants, gate valves and boxes, and concrete thrust blocks; and
- Furnishing and installation of all materials required to connect to existing water mains, replace existing services, new gate valves, tapping sleeves, removal of existing gate valves, corporation cocks, saddles, curb stops, service boxes, and abandoning of the existing water system (if applicable), all as shown on the Contract Drawings. All abandoned pipes shall be plugged and capped with concrete.

Ductile Iron Pipe and Fittings for Water Distribution

All ductile iron water pipe shall conform to American Water Works Association (AWWA) C150 and AWWA C151. Water distributions systems shall be Class 52 ductile iron pipe with push-on or mechanical joints with gaskets conforming to AWWA C111. Ductile iron water pipe shall be double cement lined inside and asphalt seal coated in accordance with AWWA C104. The pipe shall be furnished with necessary materials and equipment recommended by the manufacturer for use in joining pipe lengths and fittings conforming to ANSI Specifications.

Resilient Wedge Gate Valves

Resilient wedge gate valves shall be iron body, resilient seated type. The valves shall be designed for 250 psi working pressure and 400 psi test pressure. Valves are to have O ring seals and a non-rising stem. Valves shall have a 2 inch operating nut. Resilient gate valves shall meet the most recent version of the AWWA standard specification AWWA C509. Resilient wedge valves shall have mechanical joint ends. Valve boxes shall be cast iron, asphalt coated, sliding, heavy pattern type, consisting of three (3) pieces; a flanged bottom piece, a flanged top piece, and a cover with two (2) lifting holes and the word "water" cast on the top. A minimum 6 inch overlap is required between sliding sections. The valve box shall be designed and constructed to prevent direct transmission of traffic loads to the pipe or valve. The inside diameter of boxes shall be at least 4 1/2 inches and lengths shall be as necessary to suit ground elevation. The top of the cover shall be flush with the top of the box rim. Box covers shall be round frame and cover.

Hydrants

Fire hydrants shall have 6-inch mechanical joint inlet connections to the main, two 2 ½-inch hose connections, 180-degrees apart, and one 4 ½-inch steamer connection with valve openings 5 ¼-inches in diameter minimum in the valve seat. The standpipe shall have an 8 ½-inch minimum diameter. Hydrants shall have mechanical joint shoes, 5-feet 6-inches bury, 5 ¼-inch valve, and conform to the most recent revision of AWWA Specification C-502. Hydrants shall be thoroughly cleaned and given two shop or field coats of paint in accordance with AWWA C502. Hydrants shall be installed in conformance to AWWA C600 Section 11 using thrust blocks and restrained joints.

Disinfection of Water Mains and Appurtenances

All pipelines shall be disinfected, after testing and prior to being placed into service, in accordance with the AWWA Standard C651.

Hydrostatic Tests

After the pipe is laid, the joints completed, fire hydrants permanently installed, and the trench partially backfilled leaving the joints exposed for examination, the newly laid piping or any valved section of water supply lines or water service piping shall, unless otherwise

specified, be subject for 2 hours to a hydrostatic pressure test of 200 psi as specified in AWWA Standards.

G3020 – Sanitary Sewer Utilities

Provide labor, materials, and equipment necessary to complete the work of this Section, including but not limited to the following:

- Sanitary sewage system piping, structures and appurtenances from a point ten (10) feet outside the building to the point of disposal.

Polyvinyl Chloride (PVC) Gravity Sewer Pipe

Sanitary sewage pipe shall be type PSM, SDR-35 PVC pipe conforming to the requirements of American Society for Testing and Materials (ASTM) D3034, current edition. Joints shall be elastomeric, oil resistant gasket joints conforming to the requirements of ASTM D3212, current edition, push-on type. Tee branches, wyes, and fittings shall be type PSM SDR-35 PVC pipe, conforming to ASTM D3034, current edition.

Cleanouts

Cleanouts shall be cast iron with a heavy-duty brass top. Cleanout frame and cover shall be set in concrete 12 by 12 by 6-inches deep, except where location is in bituminous paving. Set top of cleanout 1-inch above surrounding earth grade or flush with grade when installed in paving.

Tap Connections

Branch connections to existing pipes shall be made by installing a saddle or wye connection.

Sanitary Sewer Manholes

Precast reinforced concrete manhole structures shall comply with material, design, and construction standards specified under ASTM C478. Manholes shall be 4-foot diameter. Manhole tops shall be precast concrete designed to meet American Association of Standard Highway and Transportation Officials (AASHTO) H20 loadings. Frames and covers shall be of cast iron conforming to the requirements of ASTM A48, Class No. 30. Cement for manholes shall be Type II and concrete shall have a minimum strength of 4,000 psi. Joints between sections of concrete structures shall be sealed with a self-sealing butyl rubber based flexible joint sealant gasket complying with ASTM C443. Manhole Steps and reinforcing rods shall conform to ASTM A615. Manhole frames shall be adjusted to finish course with brick masonry.

G3030 – Storm Drainage Utilities

Provide labor, materials, and equipment necessary to complete the work of this Section, including but not limited to the following:

- Corrugated polyethylene pipe;
- Drainage catch basins and manholes;
- Underground detention/recharge systems;
- Water quality structures;
- Area drains;
- Bioretention basins; and
- Rainwater reuse storage tank.

Corrugated Polyethylene Pipe

Stormwater collected by area drains, catch basins, and on rooftops shall be conveyed through a closed drainage system using corrugated polyethylene pipe (CPP). The CPP pipe shall be sized utilizing accepted engineering practices for closed drainage systems. CPP pipe shall conform to AASHTO M-294, AASHTO M242, or AASHTO MP6, Type S depending upon the diameter of the pipe.

Storm Drain Manholes

Precast reinforced concrete manhole structures shall comply with material, design, and construction standards specified under ASTM C478. Manholes shall be 4-foot diameter. Manhole tops shall be precast concrete designed to meet H20 loadings. Frames and covers shall be of cast iron conforming to the requirements of ASTM A48, Class No. 30. Cement for manholes shall be Type II and concrete shall have a minimum strength of 4,000 psi. Joints between sections of concrete structures shall be sealed with a self-sealing butyl rubber based flexible joint sealant gasket complying with ASTM C443. Manhole Steps and reinforcing rods shall conform to ASTM A615. Manhole frames shall be adjusted to finish course with brick masonry.

Catch Basins

Precast reinforced concrete catch basins shall comply with material, design, and construction standards specified under ASTM C478. Frames and grates shall be of 4-flange cast iron. Catch basins shall have removable hoods and a minimum 4-foot deep sump.

Corrugated Polyethylene Pipe for Underground Detention/Recharge Systems

Corrugated polyethylene pipe (CPP) shall conform to AASHTO M-294, AASHTO M242, or AASHTO MP6, Type S depending upon the diameter of the pipe. CPP pipe shall have an interior surface that is smooth and even, free from roughness, projections, indentations, offsets, or irregularities of any kind. Pipe and pipe fittings shall be high-density polyethylene meeting the requirements of ASTM D3350. Pipe shall be installed with a minimum 12-inch cover for AASHTO H-20 loading. For recharge systems pipe shall be perforated per the manufacturer's standard perforation pattern.

Underground Detention/Recharge Systems

Underground detention/recharge systems shall be composed of solid (for detention) or perforated (for recharge) Corrugated Polyethylene Pipe (CPP) set in 1-1/2-inch crushed stone (double washed for recharge) complying with MDOT M2.01.1. The pipe shall be placed within the crushed stone so that it is a minimum of 6 inches above the suitable base and has a minimum 6 inches of cover. The top and sides of the crushed stone shall be wrapped in geotextile fabric with a 12-inch overlap. The crushed stone shall be covered with 6 inches of gravel borrow (MDOT M1.03.0 Type A), ordinary borrow (MDOT M1.01.0), and either 12 inches of gravel subbase (MDOT M1.03.0 Type B) beneath paved surfaces or 4 inches of loam (MDOT M1.07.0) beneath pervious surfaces. Access manholes shall be provided at the four corners of the basin and inspection ports shall be provided for each pipe run.

Water Quality Structures

The water quality structure shall have a proven record of having the capability to remove a minimum of 80% of the sediment load from the low-flow storm conditions from the total

catchment area of the drainage system. The structure must be capable of removing the silt and clay-sized particles. The water quality structure shall be installed underground as part of the stormwater system and be designed to accept AASHTO H-20 loading. The water quality structure shall be equipped with a high flow bypass and without backwater conditions so as to prevent resuspension of material. The structure shall be maintainable from the surface.

Area Drains

Area drains required for this contract shall be manufactured from PVC pipe stock, utilizing a thermo-molding process to reform the pipe stock to the specified configuration. The drainage pipe connection stubs shall be manufactured from PVC pipe stock and formed to provide a watertight connection with the specified pipe system. This joint tightness shall conform to ASTM D3212 for joints for drain and sewer plastic pipe using flexible elastomeric seals. The pipe bell spigot shall be joined to the main body of the area drain. A PVC cap shall be installed at the bottom of the area drain sump. The pipe stock used to manufacture the main body and pipe stubs of the surface drainage inlets shall meet the mechanical property requirements for fabricated fittings as described by ASTM D3034, Standard for Sewer PVC Pipe and Fittings: ASTM F1336, Standard for PVC Gasketed Sewer Fittings. The grates furnished for all area drains shall be ductile iron grates and shall be made specifically for each basin so as to provide a round bottom flange that closely matches the diameter of the surface drainage inlet. Grates for area drains shall be capable of supporting H-25 wheel loading for heavy-duty traffic or H-10 loading for pedestrian traffic. Metal used in the manufacture of the castings shall conform to ASTM A536 grade 70-50-05 for ductile iron. Grates shall be provided painted black. Grates in walkways shall meet ADA requirements. Grates in planting beds shall be domed grates.

Bioretention Basins

Bioretention basins shall be planted depressions underlain with well-drained planting soils and a stone underdrain system. The surface depression is sized to contain the water quality volume for the runoff directed to the basins. The following materials are used in a bioretention basin:

1. Planting Soil – The depth of the planting soil shall be 24” to 48” and be placed over the sand filter layer. The planting soil shall be a mixture of sand, compost, and topsoil to the following proportions by volume: 40% Sand, 20-30% topsoil, and 30-40% compost. The infiltration rate of the planting soil layer within the bioretention areas after installation shall be between 4 in/hr and 10 in/hr. The planting soil shall be a uniform mix, free of plant residue, stones, stumps, roots or other similar objects larger than two inches. No other materials or substances shall be mixed or dumped within the bioretention area that may be harmful to plant growth, or prove a hindrance to the planting or maintenance operations.

2. Course Sand – The depth of the sand filter layer shall be 12-inches and placed over the pea gravel layer. The infiltration rate of the sand filter layer within the bioretention areas after installation shall be 8 in/hr or greater. The sand filter layer shall consist of clean inert, hard, durable grains of quartz or other hard durable rock, free from clay, organics, surface coatings or other deleterious material. Sand shall meet ASTM C-33 (Fine Aggregate), with a Fines Modulus Index of 2.75 or greater.

3. Pea Gravel – The depth of pea gravel shall be 4” and be placed over the crushed stone layer. Pea gravel shall consist of durable crushed rock or durable crushed gravel stone free from ice and snow, sand, clay, loam, or other deleterious or organic material. The pea gravel shall be double washed and shall be 1/4 to 3/8 inch in size or equivalent to #9 double washed crushed stone.

4. Crushed Stone – The depth of crushed stone shall be 12” and placed at the bottom of the bioretention basin. The crushed stone in the bioretention basin shall be clean double-washed crushed aggregate, free of rock dust, fines or soil particles. Crushed stone shall consist of durable crushed rock or durable crushed gravel stone, free from ice and snow, sand, clay, loam, or other deleterious or organic material.

5. Underdrain Piping – Underdrain piping shall be used in the drainage crushed stone layer of the bioretention facilities. Cleanout pipes shall be provided at the ends of each underdrain pipe. Underdrain piping shall be 4” CPP or 4” Schedule 40 PVC pipe and shall be perforated.

G40: SITE ELECTRICAL UTILITIES

G4010 - SITE ELECTRIC DISTRIBUTION SYSTEMS

A. The Main Switchboard will be fed from an exterior Utility Co. owned pad mount transformer. The primary feed to the transformer will be fed from a Utility Co. pole located at or near 70 Winslow Avenue.

1. Primary Conduits: 2-4” PVC Schedule 40 conduits from the utility company riser pole to pad mounted transformer.
2. Primary service feeders shall be furnished and installed by the Utility Co.
3. Secondary Conduits: 5-4” PVC Schedule 40 conduits from the utility company riser pole to pad mounted transformer.
4. Secondary service feeders shall be five sets of 4-600kCMIL XHHW-2 conductors.
5. Concrete Pad: 84”x83” to conform to the utility company standards.
6. Grounding: to conform to the utility company standards.

G4050 - SITE LIGHTING

A. Pedestrian walkways shall be designed for an average maintained illuminance value (Eavg) of 0.6 foot-candle horizontal, and 1.1 foot-candle vertical, as measured 6’- 0" above ground, and shall maintain an avg/min illuminance uniformity ratio not to exceed 4:1. (This means that if the average illuminance at the ground plane is 0.6 foot-candles, the minimum illuminance shall not be lower than 0.15 foot-candles).

B. All parking lots shall be designed for a minimum level of 0.2 foot-candle at the ground plane, a minimum vertical illuminance of 0.1 foot-candle measured 5’-0” above the ground plane and a max/min uniformity ratio of 20:1 (this means that if the minimum is 0.2 foot-candle, the maximum foot-candle level shall not be higher than 4.0 foot-candles).

C. Roadways shall be designed for an average maintained illuminance value (Eavg) of 0.6 foot-candle and shall maintain an average/minimum uniformity ratio not exceeding 4:1 (this means that if the average number of foot-candles at the ground plane is 0.9, the minimum foot-candle level shall not be lower than 0.15 foot-candles).

D. Building security lighting shall be designed for an average illuminance value (Eavg) of 0.5 foot candle horizontal.

E. Pedestrian walkway lighting shall be LED bollard fixtures; parking and roadway lighting shall be wired, or solar powered LED fixtures mounted on 20 ft. poles. Building security lighting shall be LED wall packs.

APPENDIX I

LEED V4 BD+C: SCHOOLS (LEEDV4 SC)
PROJECT SCORECARD

LEEDv4 BD+C: Schools (LEEDv4 SC)
Project Scorecard

Project: **Leicester School MS**
Address: **174 Paxton Street, Leicester, MA 01524**
Date: **10/30/2019 (REVISED per meeting on 10/24/19)**

The Green Engineer
Sustainable Design Consulting

LEED Goal	MSBA 2%
Bldg Area	141,000 sf - FAA will send a more accurate number
Parking	185 spaces
Site Area	TGE will work with Nitsch to develop LEED boundary and determine total site area.
Staff	130-140
Students	930
Visitors	25 average daily

POINT TOTALS

Yes	M+	M-	No
43	36	17	14

LEED v4.1 - Credits we are targeting LEED v4.1 approach

Credit point moved

					GENERAL PROJECT DOCUMENTATION		**Responsible**	**Notes**
D	Y				Plf1	Minimum Program Requirements	Req'd	Team	REQUIRED: Project must meet all MPRs to be eligible for LEED certification. **TGE will work with Nitsch on developing LEED boundary.**
	Yes	M+	M-	No					
	0	1	0	0	**INTEGRATIVE PROCESS**		1	**Responsible**	**Notes**
D		1			IPc1	Integrative Process	1	Team	CREDIT: Perform energy and water-use analysis in early design through the use of a "simple box" model and development of a water budget, respectively. **Follow-up discussion is needed in the next few weeks to detemine if this credit will be pursued.**
	Yes	M+	M-	No					
	1	3	2	9	**LOCATION & TRANSPORTATION**		15	**Responsible**	**Notes**
D				N	LTc1	LEED for Neighborhood Development Location	15	Team	CREDIT: Project located in a LEED ND development.
D				1	LTc2	Sensitive Land Protection	1	Nitsch	CREDIT: Locate the development footprint on land that has been previously developed. **Project is less than 100' to wetland**
D			2		LTc3	High Priority Site	1-2	Fuss and O'Neill	CREDIT: Locate on a brownfield where soil or groundwater contamination has been identified, and where the local, state, or national authority (whichever has jurisdiction) requires its remediation. **Phase I complete. No comtamination found. No remediation anticipated. Project is not in a DDA.**
D	1	1		3	LTc4	Surrounding Density and Diverse Uses	1-5	TGE	CREDIT: Avg. surrounding density >22,000 sf (2pts) or >35,000 (4pts) and/or within 1/2 mile walking distance of at least 8 diverse uses (2pts). **Multiple uses within 1/2 mile. Calculations need to be done for walking distance.**
D				4	LTc5	Access to Quality Transit	1-4	TGE	CREDIT: 1pt - 72 wkdy & 40 wknd; 3 pts - 140 wkdy & 108 wknd; 6 pts - 360 wkdy & 216 wknd trips. **Project does not have enough daily trips by bus to meet the credit.**
D				1	LTc6	Bicycle Facilities	1	FAA/ TGE	CREDIT: Locate within 200 yds of bicycle network and provide long-term bike storage for at least 5% of all regular building occupants and short-term storage for at least 2.5% of all peak visitors. Provide one shower for the first 100 regular building occupants and one additional for every 150 thereafter. **There likely will not be staff showers in the school.** **10/24/19 - credit moved to No.**
D		1			LTc7	Reduced Parking Footprint	1	Nitsch	CREDIT: Do not exceed the minimum local code requirements for parking capacity. Provide parking capacity that is a 40% reduction below the base ratios recommended by the Parking Consultants Council. Provide preferred parking for carpools for 5% of the total parking capacity. **Calculations need to be performed to determine if the parking count meets the requirements. In addition, the number and location of carpool parking will need to be determined.** **10/24/19 - Want to keep the electricity and maintenance cost as low as possible for the parking lot.**
D		1			LTc8	Green Vehicles - **LEED v4.1**	1	Nitsch/ BLW	CREDIT: Designate 5% of all parking spaces as preferred parking for green vehicles (a discounted parking rate of at least 20% for green vehicles is an acceptable substitute). In addition, install electrical vehicle supply equipment (EVSE) in 2% of all parking spaces used by the project. Removed preferred parking for green vehicle requirements. Option 1: Instal EVSE in 2% of parking spaces used by the project (min 2) Option 2: Make 6% of parking spaces (min 6 spaces) EV Ready Schools: Option 3: Changed green buses to Electric buses **The project will need to provide approximately 4 electric charging stations in addition to green vehicle parking spaces. Eversource and National Grid have a new program supporting EV charing infrastructure cost for up to 5% of the site's parking spaces.**
	Yes	M+	M-	No					
	3	6	3	0	**SUSTAINABLE SITES**		12	**Responsible**	**Notes**
C	Y				SSpr1	Construction Activity Pollution Prevention	Req'd	Nitsch/ CM	REQUIRED: Create/implement an ESC plan for all construction activities associated with the project. The plan must conform to the requirements of the 2012 U.S. EPA Construction General Permit (CGP). **The project will implement an ESC plan.**

D	Y				SSpr2	Environmental Site Assessment	Req'd	Env. Eng.	REQUIRED: Conduct a Phase I Environmental Site Assessment as described in ASTM E1527–05 (or a local equivalent) to determine whether environmental contamination exists at the site. If contamination is suspected, conduct a Phase II Environmental Site Assessment as described in ASTM E1903–11 (or a local equivalent). If a site is contaminated, remediate the site to meet local, state, or national environmental protection agency region residential (unrestricted) standards, whichever are most stringent. **Phase I site assessment and survey has been completed.**
D	1				SSc1	Site Assessment	1	FAA/Nitsch/ WL	CREDIT: Complete and document a site assessment that includes: Topography, Hydrology, Climate, Vegetation, Soils, Human Use, Human health effects. **Project team will perform a site assessment. There are drainage issues on site – a lot of grading needed. A lot of large rocks on the site.**
D		2			SSc2	Site Development - Protect or Restore Habitat	1-2	WL	CREDIT: Preserve and protect from all development and construction activity 40% of the greenfield area on the site (if such areas exist) and restore 30% (including the building footprint) of the previously developed site area with native & adaptive vegetation OR provide financial support equivalent to at least $0.40 per square foot for the total site area to a nationally or locally recognized land trust or conservation organization. **Project will include native and adapted vegetation. Too early in design to determine if credit can be achieved.**
D		1			SSc3	Open Space	1	WL	CREDIT: Provide outdoor space greater than or equal to 30% of the total site area (including building footprint). A minimum of 25% of that outdoor space must be vegetated (turf grass does not count as vegetation) or have overhead vegetated canopy. The outdoor space must be physically accessible. **calculations will have to be performed as the design developes to determine if the credit can be achieved. school wants to create site education opportunities - gardens, etc.**
D		3			SSc4	Rainwater Management - **LEED v4.1**	2-3	Nitsch	CREDIT: On site, manage the runoff from the developed site for the 95th percentile (2pts) or 98th percentile (3pts) of regional or local rainfall events using LID & GI strategies that best mimic natural site hydrology OR manage on site the annual increase in runoff volume from the natural land cover condition to the post developed condition. (3 pts). Option 1: Lowered thresholds to 80th, 85th, and 90th percentile. Lowered zero-lot line projects to 70th, 75th, and 80th percentile. Eliminated Option 2. **This credit can be difficult to achieve. Nitsch will look at the LEED v4.1 version of this credit and determine if the credit can be achieved. A cistern, vegetated swales, raingardens were discussed as possiblities.** **10/24/19 - Water is an important focus on the site. Stormwater mitigation is an important topic. Even if we do not meet the LEED requirements, Nitsch will implement strategies to minimize stormwater runoff.**
D			2		SSc5	Heat Island Reduction	1-2	WL/ FAA	CREDIT: Use any combination of non-roof Measures, high-Reflectance roof, or vegetated roof to be equal to or greater than the total roof + hardscape area on-site AND/OR place a minimum of 75% of parking spaces under cover. **Project will have a light colored roof. Project team should consider light colored materials for walkways and other hardscape. The parking lot and connecting roads will make this make achieving this credit difficult.**
D	1				SSc6	Light Pollution Reduction	1	ART	CREDIT: Do not exceed allowable backlight, uplight or glare (BUG) ratings for all exterior lighting as determined by the project's lighting zone (LZ). **Project will have a limited amount of outdoor lighting - only have the quantity needed for safety. Full cut off lighting that is dark sky compliant will be specified. there will be a flag pole that will require lighting.**
D			1		SSc7	Site Master Plan	1	Owner	CREDIT: The project must achieve at least four of six credits - see ref guide. AND A site master plan for the school must be developed in collaboration with school authorities. Previous sustainable site design measures should be considered in all master-planning efforts so that existing infrastructure is retained whenever possible. The master plan must therefore include current construction activity plus future construction (within the building's lifespan) that affects the site. The master plan development footprint must also include parking, paving, and utilities. **Credit achievement not likely. Projects where no future development is planned are not eligible for this credit.**
D	1				SSc8	Joint Use of Facilities	1	FAA/Owner	CREDIT: In collaboration with the school authorities, ensure that at least three of the following types of spaces in the school are accessible to and available for shared use by the general public: · auditorium; · gymnasium; · cafeteria; · one or more classrooms; · playing fields and stadiums; and · joint parking. Provide access to toilets in joint-use areas after normal school hours. **School will be shared with community groups. sports fields will be open to the community on the weekends.**
	Yes	M +	M -	No					
	4	5	3	0	**WATER EFFICIENCY**		12	Responsible	Notes
D	Y				WEpr1	Outdoor Water Use Reduction	Req'd	WL	REQUIRED: Install landscape that does not require a permanent irrigation system beyond a maximum two-year establishment period OR reduce the project's landscape water requirement by at least 30% from the calculated baseline for the site's peak watering month. **See credit notes below.**

D	Y				WEpr2	Indoor Water Use Reduction	Req'd	BLW	REQUIRED: Flush and flow fixtures must reduce aggregate water consumption by 20% from the baseline. All newly installed toilets, urinals, private lavatory faucets, and showerheads that are eligible for labeling must be WaterSense labeled. **See credit notes below.**
D	Y				WEpr3	Building-level Water Metering	Req'd	BLW/ Owner	REQUIRED: Install permanent water meters that measure the total potable water use for the building and associated grounds. Commit to sharing with USGBC the resulting whole-project water usage data for a five-year period. **Project will have building level water meters.** **10/24/19 - TGE will sent information to the school about setting up an Energy Star Portfolio Manager account.**
D	1	1			WEc1	Outdoor Water Use Reduction	1-2	WL	CREDIT: Credit Reqs: Show that the landscape does not require a permanent irrigation system beyond a maximum two-year establishment period (2pts) OR reduce the project's landscape water requirement (LWR) by at least 50% (1pt) or 100% (2pts) from the calculated baseline for the site's peak watering month. **Project will likely have synthetic fields. Gardens for students and community being considered. Native and drought tolerant plants will be selected. Project may have some permanent irrigation.**
D	2	2	3		WEc2	Indoor Water Use Reduction	1-7	BLW	CREDIT: Further reduce fixture and fitting water use from the calculated baseline in WE Prerequisite Indoor Water Use Reduction and install equipment that meets the minimum requirements. All newly installed toilets, urinals, private lavatory faucets, and showerheads that are eligible for labeling must be WaterSense labeled. **bathrooms will include some gender neutral bathrooms. automated water fixtures are preferred.** **10/24/19 - TGE recommends .35 gpm Lavs, 1.28 gpf WC, .125 gpf urinals, 1.5 gpm showers, and 1.5 gpm breakroom sinks. We will run calculations.**
D		2			WEc3	Cooling Tower Water Use - **LEED v4.1**	1-2	BLW	CREDIT: Conduct a one-time potable water analysis, measuring at least the five control parameters required. Calculate the number of cooling tower cycles by dividing the maximum allowed concentration level of each parameter by the actual concentration level of each parameter found in the potable makeup water. Limit cooling tower cycles to avoid exceeding maximum values for any of these parameters. Option 2: No Cooling Tower: 2 points if projects meets requirements and does not have a cooling tower or recieve cooling from a district cooling system Option 3: Demonstrate the project is using a minimum of 20% recycled alternative water to meet process water demand for 1 point or 30% for 2 points. Process water suses eligilbe for Option 3 must represent at least 10% of total building water use. Eligible systems include: boilers, humidifaction systems, other subsystems. **10/24/19 - Further discussion about this credit is needed. TGE will discuss with BLW.**
D	1				WEc4	Water Metering	1	BLW	CREDIT: Install permanent water meters for two or more of the following water subsystems: **irrigation**, indoor plumbing fixtures and fittings, **domestic hot water, boiler,** reclaimed water, and/or other process water. **Water is well water. Further discussion is needed on this credit.**
	Yes	M+	M-	No					
	18	10	3	0		**ENERGY & ATMOSPHERE**	31	**Responsible**	**Notes**
C	Y				EApr1	Fundamental Commissioning and Verification	Req'd	CxA	REQUIRED: A qualified CxA must be engaged by end of DD to perform Cx services for all base-building HVAC&R equipment serving the project. An OPR document, BoD, and Current Facilities Requirements and Operations and Maintenance Plan must be prepared with information necessary to keep the building operating efficiently. **Fundamental commissioning will be performed.**
D	Y				EApr2	Minimum Energy Performance	Req'd	Team/ Andelman & Lelek	REQUIRED: Demonstrate an improvement of at least 5% in the proposed building performance rating compared with the ASHRAE 90.1–2010 baseline. **Project will demonstrate at least a 5% improvement in building performance compared with ASHRAE 90.1–2010 baseline.**
D	Y				EApr3	Building-level Energy Metering	Req'd	BLW	REQUIRED: Install new or use existing base building-level energy meters, or submeters that can be aggregated to provide base building-level data representing total building energy consumption and commit to sharing whole-building energy-use data with USGBC for 5 years. **Project will have building level energy metering. Currently there is no gas connection for the site. All electric. Expensive to bring in a gas line.**
D	Y				EApr4	Fundamental Refrigerant Management	Req'd	BLW	REQUIRED: Do not use chlorofluorocarbon (CFC)-based refrigerants in new HVAC&R systems. **Project will not use CFC based refridgerants.**
C	5	1			EAc1	Enhanced Commissioning	2-6	CxA	CREDIT: Perform Enhanced Cx services for all base-building HVAC&R equipment (3pts) AND/OR develop monitoring-based procedures and identify points to be measured and evaluated to assess performance of energy- and water-consuming systems (1pt) AND/OR complete all required Cx process activities for the building's thermal envelope (2pts). **Enhanced commissioning and building envelope commissioning will be performed, as required by MSBA.**

D	13	3			EAc2	Optimize Energy Performance	1-16	Team/ Andelman & Lelek	CREDIT: Demonstrate an improvement of at least 6% (1pt) to 42% (16pts) on an energy-cost basis in the proposed building performance rating compared with the ASHRAE 90.1–2010 baseline. **Project will show at least a 32% energy cost reduction compared with the ASHRAE 90.1–2010 baseline. Project will have full AC. All LED lighting, with vacancy sensors and daylighting sensors. Systems should be simple - maintenance of building will be hired out. There is currently no gas connection - just electricity (NGrid). Gas connection may be added. The project will have a generator.** **Fin tube at perimeter, partial cooling, ventilation, dehumidification.**
D		1			EAc3	Advanced Energy Metering	1	BLW/ ART	CREDIT: Permanent advanced energy metering must be installed for all energy sources used by the base building as well as any individual energy end uses that represent 10% or more of the total annual consumption of the building. The advanced energy metering must t be permanently installed, record at intervals of one hour or less, and transmit data to a remote location. Electricity meters must record both consumption and demand. Whole-building electricity meters should record the power factor, if appropriate.The data collection system must use a local area network, building automation system, wireless network, or comparable communication infrastructure.The system must be capable of storing all meter data for at least 36 months. The data must be remotely accessible. All meters in the system must be capable of reporting hourly, daily, monthly, and annual energy use. **10/24/19 - The school is interested in this credit. TGE to discuss credit with BLW and ART.**
C		2			EAc4	Demand Response - **LEED v4.1**	1-2	Owner/ BLW	CREDIT: Participate in an existing demand response (DR) program and design a system with the capability for real-time, fully-automated DR based on external initiation by a DR Program Provider (2pts) OR, if a DR program is not available, provide infrastructure to take advantage of future demand response programs or dynamic, real-time pricing programs and develop a comprehensive plan for shedding at least 10% of building estimated peak electricity demand (1pt). Case 3: 1-2 points for implementing one or more load flexibility and management strategies including peak load optimization, flexible operating scenerios, on-site thermal and/or electricity storage, and grid resilience technologies. **10/24/19 - There is some interest in Demand Response. NGrid is the utility provider. Team will need to discuss program options with NGrid. In addition, TGE recommends that if the school is interested in untility incentives, they should reach out to NGrid to start the process.**
D		3			EAc5	Renewable Energy Production	1-3	Owner/ TGE	CREDIT: Use renewable energy systems to offset building energy costs by 1% (1pt), 5% (2pts), or 10% (3pts). **Power Purchase Agreement (PPA) is an option. School may also consider purchasing PV.** **10/24/19 - After the intial energy model is complete, TGE will assess the amount of PV needed to meet the credit requirements.**
D			1		EAc6	Enhanced Refrigerant Management	1	BLW	CREDIT: Credit Reqs: Select refrigerants that are used in HVAC&R equipment to minimize or eliminate the emission of compounds that contribute to ozone depletion and climate change (1 pt). **VRF (variable refrigerant flow) system will make meeting the credit requirements unlikely.**
C			2		EAc7	Green Power and Carbon Offsets	1-2	Owner	CREDIT: Purchase green power and/or carbon offsets through a 5-year contract to offset 50% (1pt) or 100% (2pts) of the building's energy use with renewable sources. **Green Power and Carbon Offsets can be purchased if owner is interested. Decision doesn't need to be made until after construction.**
	Yes	M +	M -	No					
	4	4	0	5	**MATERIALS & RESOURCES**		13	**Responsible**	**Notes**
D	Y				MRpr1	Storage & Collection of Recyclables	Req'd	Owner/ FAA	REQUIRED: Provide dedicated areas for the collection and storage of recyclable materials for the entire building that includes mixed paper, corrugated cardboard, glass, plastics, and metals. Safe collection, storage, and disposal measures must also be provided for two of the following: batteries, mercury-containing lamps, and electronic waste. **Project will have a recycling collection area and will include the collection of batteries and electronic waste.**
C	Y				MRpr2	Construction and Demolition Waste Management Plan	Req'd	CM	REQUIRED: Develop and implement a compliant construction and demolition waste management plan that establishes waste diversion goals for the project by identifying at least five materials targeted for diversion, approximate a percentage of the overall project waste that these materials represent, whether materials will be separated or commingled, descriptions of the diversion strategies planned, and describe where the material will be taken/how the recycling facility will process the material. **Project will implement a construction waste management plan.**
C		3		2	MRc1	Building Life-Cycle Impact Reduction - **LEED v4.1**	2-5	FAA/ TGE	CREDIT: Option 4: Whole-Building Life-Cycle Assessment - Conduct an LCA that demonstrates a reduction, compared with a baseline building, in at least three of the six impact categories one of which must be global warming potential. Path 1: Conduct an LCA (1 pt) Path 2: Conduct an LCA that demonstrates a minimum of a 5% reduction (2 pnts) Path 3: Conduct an LCA that demonstrates a minimum of a 10% reduction (3 pnts) **TGE can perform a Whole-Building Life-Cycle Assessment as an additional service. Further discussion is needed. Credit must be performed in SD.**

C	1			1	MRc2	Building Product Disclosure & Optimization-EPD's - **LEED v4.1**	1-2	FAA/CM	CREDIT: Provide EPDs for at least 20 different permanently-installed products from 5 or more manufacturers (1pt). Multi-Attribute Optimization (1 additional point). Weighted EPDs have been eliminated except Product Specific Type III EPDs are now worth 1.5 products **Project team will specify products with compliant EPDs.**
C		1		1	MRc3	BPDO-Raw Materials - **LEED v4.1**	1-2	FAA/CM	CREDIT: Option 2 Leadership Extraction Practices: Use products that meet at least one of the responsible extraction criteria materials re-use; bio-based, recycled content, certified wood, for at least 25%, by cost, of the total value of permanently installed building products in the project. For credit achievement calculation, products sourced (extracted, manufactured, purchased) within 100 miles (160 km) of the project site are valued at 200% of their base contributing cost. Structure and enclosure materials may not constitute more than 30% of the value of compliant building products. (1pt). Option 1 Raw Materials Source & Extraction Practices (1 additional point). Use products equal to 20% (1 pt) or 40% (2 pts) of cost that meet the repsonsible sourcing criteria (which have remained virtually the same). Structure and enclosure limit eliminated. **Project team will specify products with recycled content, FSC wood, and regional materials.**
C	1			1	MRc4	BPDO-Material Ingredients - **LEED v4.1**	1-2	FAA/CM	CREDIT: Option1 Material Ingredient Reporting: Provide HPDs or C2C certification for at least 20 different permanently-installed products from 5 or more manufacturers (1pt). Material Ingredient Optimization OR Product Manufacturer Suppy Chain Optimization (1 additional pt). Compliant reports are equal to 1.5 products **Project team will specify products with compliant HPDs.**
C	2				MRc5	Construction and Demolition Waste Management	1-2	CM	CREDIT: Divert at least 50% of the total construction and demolition material; diverted materials must include at least three material streams. (1pt), 75% & four material streams (2pts), OR do not generate more than 2.5 pounds of construction waste per square foot of the building's floor area (2pts). **Project will divert at least 75% of waste from landfill and will track four waste streams.**

	Yes	M +	M -	No					
	6	4	6	0	**INDOOR ENVIROMENTAL QUALITY**		16	Responsible	**Notes**
D	Y				EQpr1	Minimum IAQ Performance	Req'd	BLW	REQUIRED: Comply with the requirements of ASHRAE 62.1-2010, Ventilation for Acceptable Indoor Air Quality. **Project will comply with the requirements of ASHRAE 62.1-2010**
D	Y				EQpr2	Environmental Tobacco Smoke (ETS) Control	Req'd	Owner	REQUIRED: Project must prohibit smoking inside the building and outside the building except in designated smoking areas located at least 25 feet from all entries, outdoor air intakes, and operable windows. Provide signage within 10 ft of all building entries conveying the no-smoking policy. **Project will prohibit smoking within 25' of all entries.**
D	Y				EQpr3	Minimum Acoustical Performance	Req'd	Acentec	REQUIRED: Comply with the requirements for HVAC Background Noise, Exterior Noise, Reverberation Time, and Classrooms and Core Learning Spaces. **TGE to confirm with Acentec we will meet the requirements.**
D	2				EQc1	Enhanced IAQ Strategies	1-2	FAA/ BLW	CREDIT: Comply with the following requirements for 1pt: Entryway Systems, Interior Cross-Contamination Prevention, and Filtration. For an additional point, comply with the one of the following: Exterior Contamination Prevention, Increased Ventilation, Carbon Dioxide Monitoring, Additional Source Control, or Monitoring. **Project will comply with both Option 1 and Option 2 and will provide CO2 sensors in all densely occupied spaces. Lab spaces will have hard lid ceilings and self closing doors.**
C		2	1		EQc2	Low-Emitting Materials - **LEED v4.1**	1-3	FAA/CM	CREDIT: Project must install compliant products that meet the (1) emissions testing requirements AND (2) VOC content standards for 3 (1pt), 5 (2pts), or all 6 (3pts) of the following categories: adhesives/sealants, paints/coatings, flooring, composite wood, and ceilings/walls/thermal/acoustic insulation, furniture, and exterior products. Thresholds have changed to 2 categories (1pt), 3 (2pts), 4 (3pts), 5 (3pts+EP), 90% threshold in 3+ categories (EP) of the following categories: adhesives/sealants, paints/coatings, flooring, composite wood, and ceilings/ walls/ thermal/ acoustic insulation. **Further discussion needed on materials to be specified and approach to achieving this credit.**
C	1				EQc3	Construction IAQ Management Plan	1	CM	CREDIT: Develop and implement an IAQ management plan that requires compliance with all applicable control measures of the SMACNA IAQ Guidelines for Occupied Buildings under Construction, 2nd edition, 2007, ANSI/SMACNA 008–2008, Chapter 3. **Project will implement an IAQ plan and meet the requirements of SMACNA IAQ Guidelines for Occupied Buildings under Construction.**
C	1	1			EQc4	IAQ Assessment - **LEED v4.1**	1-2	Owner/CM	CREDIT: Select one of the following two options, to be implemented after construction ends and the building has been completely cleaned. All interior finishes must be finished. Option 1 Flush-Out: Path 1: Before Occupancy: Install new filtration media and perform a building flush-out (1 pt). Path 2: During Occupancy: If occupancy is desired before the flush-out is completed, the space may be occupied only after delivery of a minimum of 3,500 cubic feet of outdoor air per square foot of gross floor area. Option 2 Air Testing: After construction ends and before occupancy, but under ventilation conditions typical for occupancy, conduct baseline IAQ testing for all occupied spaces. (2 pts) Path 1: Particulate matter and inorganic gases (1 pt) AND/OR Path 2: VOCs (1 pt) **Project will perform a flushout after construction completion and before occupancy. Futher discussion is needed on IAQ testing.**

D	1				EQc5	Thermal Comfort	1	BLW	CREDIT: Provide individual thermal comfort controls for at least 50% of individual occupant spaces. Provide group thermal comfort controls for all shared multioccupant spaces. Thermal comfort controls allow occupants, whether in individual spaces or shared multioccupant spaces, to adjust at least one of the following in their local environment: air temperature, radiant temperature, air speed, and humidity. Design thermal comfort system to ASHRAE Standard 55-2010 or to Iso and Cen Standards: Design HVAC systems and the building envelope to meet the requirements of the applicable standard. **Project will meet the requirements of ASHRAE 55-2010 and will provide thermal controls for individual and multi occupant spaces. Project will have operable windows which will help achieve controllability for 50% of individual occupants.**
D	1		1		EQc6	Interior Lighting	1-2	ART/ FAA	CREDIT: Option 1 Lighting Control: For at least 90% of individual occupant spaces, provide individual lighting controls that enable occupants to adjust the lighting to suit their individual tasks and preferences, with at least three lighting levels or scenes (on, off, midlevel). Midlevel is 30% to 70% of the maximum illumination level (not including daylight contributions). For all shared multi occupant spaces, meet all of the requirements in the reference guide (1 pt). Option 2 Lighting Quality: Meet four of the lighting quality options in the reference guide (1 pt). **Project will provide lighting controls for individual and multi occupant spaces. Futher discussioin is needed on achieving Option 2 - quality lighting.**
D			3		EQc7	Daylight	1-3	**FAA**	CREDIT: Option 1: Demonstrate through simulation that sDA of at least 55% (2pt) or 75% (3pts) is achieved. Option 2: Demonstrate through modeling that illuminance levels will be between 300 lux and 3,000 lux for 9 a.m. and 3 p.m., both on a clear-sky day at the equinox, for 75% (1pt) or 90% (2pts) of the regularly occupied floor area. Option 3: With furniture, fixtures and equipment in place, conduct an on-site measurement that demonstrates the project achieves illuminace levels equal to Option 2 for 75% (2pts) or 90% (3pts) of the regularly occupied floor area. **Credit requires daylight modeling. Further discussion is needed on whether this credit will be pursued.**
D		1			EQc8	Quality Views	1	TGE	CREDIT: Achieve a direct line of sight to the outdoors via vision glazing for 75% of all regularly occupied floor area that meets at least two of the four kinds of views outlined in the reference guide. **The classrooms will all have windows/views. Calculations will be performed as the design develops to determine if the credit will be achieved.**
D			1		EQc9	Acoustic Performance - **LEED v4.1**	1	Acentec	CREDIT: For all occupied spaces, meet the requirements, as applicable, for HVAC background noise, sound isolation, reverberation time, and sound reinforcement and masking. Meet requirements for of the following: HVAC background noise, sound transmission, and/or reverberation time. Updated to ASHRAE 2015 Handbook **Sound isolation beyond the prerequisite is suggested even if we do not pursue this credit.**
	Yes	M+	M-	No					
	6	0	0	0	**INNOVATION**		6	Responsible	Notes
D	1				INc1.1	Innovation:	1	Team	**Discussion needed. Credit options may include: Green cleaning and Pest Management and the Building as an Educational Tool. TGE can send memos with some innovation credit options to the team.**
D	1				INc1.2	Innovation:	1	Team	**10/24/19 - a school garden was discussed as a possible innovation credit. Also discussed possible water innovation credit (wastewater management or whole project water use reduction).**
D	1				INc1.3	Innovation:	1	Team	
C	1				INc1.4	Innovation:	1	Team	
C	1				INc1.5	Pilot Credit: Integrative Analysis of Building Materials	1	TGE	
C	1				INc2	LEED Accredited Professional	1	TGE	
	Yes	M+	M-	No					
	1	3	0	0	**REGIONAL PRIORITY 01603 (underlined)**		4	Responsible	Notes
D	1				RPc1	EAc2 Optimize Energy Performance (20%/8 pts)	1	-	
D		1			RPc2	EAc5 Renewable Energy Production (5%/2 pts)	1	-	
D		0			RPc3	Building Life-Cycle Impact Reduction (2 pnts)	1	-	
D		0			RPc4	WEc2 Indoor Water Use Reduction (4 pnts)	1	-	
D		1			RPc5	SSc3 Open Space (1 ptn)	1	-	
D		1			RPc6	WEc1 Outdoor Water Use Reduction (2pnt)	1	-	
	Yes	M+	M-	No					
	43	36	17	14	**PROJECT TOTALS (Certification Estimates)**		110		

Certified: 40-49 points Silver: 50-59 points Gold: 60-79 points Platinum: 80+ points

APPENDIX II

SECURITY NARRATIVE
AND CUT SHEETS

A division of Ross&Baruzzini

LEICESTER MIDDLE SCHOOL

SECURITY PROGRAM NARRATIVE

November 8, 2019

1020 Sherman Ave | Hamden, CT 06514 | t: 203.288.6490 | f: 203.288.6950
www.dvssecurity.com

General Overview

The new Leicester Middle School (LMS) will share a campus with other school facilities including the Leicester High School, ball fields, tennis courts and several parking lots.

The campus is accessed via three main roadway entrances of which are intended to be monitored by vehicle license plate reader (LPR) technology and connected to the LMS for local school and emergency service monitoring and forensic use.

The security design approach has utilized CPTED strategies by addressing items such as roadways, landscaping, curbing, and more which are addressed in more detail later in this narrative.

The school security systems and program were developed in coordination with school representatives, the architect and town emergency services. The systems are being modeled after the high school work being performed by the contractor Siemens, however customized per the specific needs and design of the LMS. The electronic systems and programs which are to be implemented are as follows:

- Access Control System (ACS)
- Intrusion Detection System (IDS)
- Video Management System (VMS)
- Intercom Communications System (ICS)
- Lock-Down/Lock-In System
- License Plate Reader System (LPR)

These listed systems have either already been addressed or will be addressed in more detail in the following pages of this Security Program Narrative.

The VMS is to provide parking lot and general ball field monitoring and recording which will all tie back into the LMS video server through the DATA/IT network. Camera surveillance is also to be provided around the building perimeter to monitor building entries and exits, the façade and walkways.

Knox Boxes for emergency entry into the LMS as well as card readers for specific perimeter doors along with penetration resistant glass at grade are all being implemented to create a secure LMS building perimeter which is accessible by approved persons in times of emergency as well as normal day to day and evening operations. An additional safety design recommendation has been to raise grade level perimeter classroom window sills to a height that hides the view of persons in the classroom from the outside while in the sitting or crouching position.

The security design is to implement main entry vestibule mantrap type electronics, building materials, design and programmatic operations. The entry vestibule will include the use of penetration resistant glass, walls, access-controlled doors, intercom communications and an inner vestibule transaction/communications window all integrated into a pleasing architectural design. The entry vestibule design is integral to the daily operation of LMS and will implement a design that is versatile and programmatically changeable to meet the various operational needs of school, after school and public event activities.

The interior of the school will implement the electronic systems previously mentioned including general hallway, Lock-Down area, admin office reception and other critical areas for video surveillance. All school perimeter doors and roof access portals will be monitored by the ACS/IDS system via magnetic door contacts with specific interior doors utilizing access-controlled card reader doors several of which are to be directed by LMS.
Field sensors such as motion detectors are to be used for multiple purposes including VMS triggering, after hour armed system breach's and direction of travel forensic analysis.
After hour school use is to be managed by specific door placement which are to be access controlled thus allowing only specific areas of the school to be used without having persons roaming the school's upper floors and classroom locations.
The Lock-Down/Lock-In system and program are integrated closely with the building architectural layout and design as well as the ACS, IDS and VMS systems. There are to be various lock down buttons located at key staff locations which once pushed will implement a series of preprogrammed as well as operational actions including an ACS system override, IDS system central station/emergency service call, and school audio/video messaging system triggering. The Lock-Down/Lock-In section found later in this narrative provides a more detailed explanation of the function including classroom and other interior shelter in place room locations.
The entire security system(s) has been based upon the initial LMS security presentation, coordination and response with the school district, emergency services and district DATA/IT department. Genetec is the security system integrated platform being standardized on for the school district and is to also be implemented at LMS.
Due to high school work and LMS security work differing time frames security system head-end servers may initially be brought on line at the High School then relocated to LMS once its security system is brought online. The phasing of the head-end work and its implementation has yet to be determined.

Architectural and Environmental Program Elements
Architectural and engineering program elements are used to develop a sound security program with components that are built into the construction of the building. These program elements are determined based on the application of Crime Prevention through Environmental Design (CPTED) and adopted school security best practices. The following is a list of these risk reduction elements.

Site and Roadways/Traffic:

- The specification of road straightaways to be 100' or less for deterrence of speed build-up leading up to the school. Road turns, speed bumps and painted zones are options for achieving speed control.

- The specification of high curbing at walkways parallel to roadways to be used to deter curb jumping.

- Roadways and service roads which will be used for emergency response vehicles specified to withstand the weight and width of emergency vehicles.

- Landscape features should be planted no closer than 10' from the building perimeter. This is to refrain from obstructions to the surveillance program and deter from being used as a means of climbing to access the roof of the building.

- The implementation of Knox Boxes at designated entry/exit points around the site.

- There is to be LPR video and associated system technology implemented at the three main entry/exit roadways to the campus.

Entry(s)/Exit(s):

- The design of the LMS main entry vestibule is to have both inner and outer doors with access control and a transaction window with intercom to allow communication and verification of ID's or a credential without allowing free entry into the building. The entry vestibule should be configured to also have another access-controlled door inside the vestibule that will allow access, should it be granted, into the administrative/office area.

- The implementation of a man-lock function for the intended vestibule wherein the exterior door can only be opened when the interior vestibule door is closed and locked, thereby allowing access into the building, out of the weather, but not internal to occupied school spaces.

- Penetration resistant Glass should be specified at the entry/exit locations including the main entry vestibules and sidelights as well as emergency exit doors with glazing.

- It is also recommended that all grade accessible glazing use penetration resistant glazing up to a height of 8'.

- The construction of entry vestibule walls should also be penetration resistant.

- The construction of the wall, transaction window and/or door between the vestibule and the administrative area to be bullet resistant (UL-752, Level 4). This bullet resistant use is to protect the person behind the window who is likely the first person to initiate a response action in an emergency and should be protected in order to do so, otherwise the security program and procedures have an opportunity to fail.

Interior:

- It is recommended that penetration resistant glass also be used at interior classroom door-lights and/or sidelights.

- Classroom as well as any lock-down room or area which integrated or adjacent glazing's will have should locate said glazing on or next to the hinge side of the door in order to minimize the possibility of a glazing breach and reach around and open the door from the secure side of the door hardware.

- The implementation of classroom locksets designed to always be in the locked position from the corridor or non-classroom side as to not require a secondary action to activate the lock from the inside. All classroom doors to allow free-egress from within the classroom to meet building code.

- The implementation of magnetic door hold-open devices which will allow teachers and staff to keep a classroom door open but have it automatically close in a lock-down situation. This will require the addition of a hydraulic door closer on all associated doors to affect the closure upon the release of the magnetic holders.

- Review special event spaces where the public may use the space during school hours, such as the auxiliary gym, with capability to physically be segregated from the balance of the building. Electronic means may support this design. The areas should have appropriate restroom amenities and egress within the segregated space to ensure the separations between public and private/secure areas in not compromised.

- Local audible exit alert sounders should be used at emergency egress only locations.

- The classroom is the primary location for emergency shelter in place happenings in schools. Each classroom should have a blind spot, or area of refuge where the occupants can be hidden from view in an emergency such as an active shooter situation. This blind spot is to be sized to be able hide the maximum quantity of students and teachers the room is programmed to hold +20%.
  (See diagram on right)

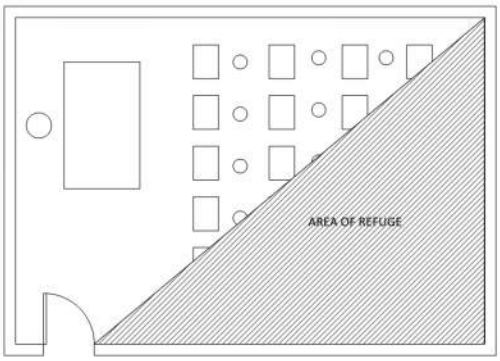

- It is recommended that classrooms with exterior windows have their window sills at a height that will not allow a person from the outside of the building looking into the classroom to see persons while they are seated.

- All classrooms and areas of assembly should have a means of two communication in order to receive emergency messages as well as report on emergencies, etc. Ex. Telephone, Intercom, Smart Board audio/video.

- Security Distribution Frames (SDF) are areas that all security field devices wire back to. An SDF may consist of ACS and IDS panels, Power supplies and possibly Network POE switches for VMS cameras when sharing IDF closets. These SDF locations are to be sized and located throughout the building in quantities calculated upon the size and density of security equipment employed by the design. The typical plywood wall space taken up by an SDF is anywhere from a 4' X 4' area to a 4' x 8' area approximates 2' to 3' AFF.

Technology Based Program Elements

Technology based program elements support the architectural components through alarm and monitoring of program components. These elements are used with human interaction, whether that be a School Resource Officer, administrative staff or facility director. All of the following systems should seamlessly integrate with each other in order to obtain a robust and effective security program. The following are systems, their components and mission for LMS.

Access Control System (ACS):

- The ACS utilizes credentials such as cards or fobs along with card readers and electrified locks to access certain and specific doors or areas. The ACS should be capable of operating on a tablet or smartphone to allow for portable security monitoring and control as might be utilized by an SRO or administrative staff.

- The ACS should be utilized with the special events and Lock-Down program to effectively compartmentalize the school. Access controlled doors should be programmed to allow only certain populations of people in designated areas thus keeping secure and non-secure zones separate.

- The ACS system should be outfitted with a credential badging station, fully programmed and implement graphical user interface (GUI) and floor plan mapping system/work station(s) that seamlessly integrate with the VMS and IDS systems.

- All field sensors should be wired directly into the ACS system as opposed to the IDS system to gain the benefit of time and date stamping as well as GUI visual control and monitoring.

- Some classrooms that share a common interior wall have doorways for access to each other from within the classroom. The doors between these classrooms are to have thumb latch deadbolts on each side of the door so that they can be independently be locked on either and/or both sides in the case of an emergency lok-down.

Intrusion Detection System (IDS):

- The IDS system is to be configured to manage offsite central station communication as well as define, arm and disarm groups of zones through the ACS integration. The IDS is to have IDS keypads at key entry exit locations in order for staff to arm and disarm the building from convenient locations.

- On a daily basis during occupied hours, the IDS will monitor fire egress and perimeter doors for a breach. This is to identify if a student or unauthorized person access the school with malicious or criminal intent. During school hours, violations in the system will go to designated school staff such as an SRO or facilities person.

- Duress and Lock-Down/Lock-In buttons as well as any water or gas leak detectors triggered at any time are to trigger a IDS alarm that alerts local staff as well as trigger offsite central station monitoring.

Video Management System (VMS):

- The VMS is to be implemented for the monitoring and recording of surveillance cameras strategically placed throughout the building and site. The VMS should be capable of operating on a tablet or smartphone to allow for portable security monitoring and control as might be utilized by an SRO or administrative staff. The VMS should be used to provide immediate camera call-up during an alarm situation such as the violation of an emergency exit door.

- Video surveillance is for the monitoring of the following areas:
    - Main building entries/exits
    - Emergency exits
    - Service Areas
    - Parking lots
    - General building perimeter
    - Critical site locations
    - Large communal spaces (i.e., gym, auditorium)

  - Stairwells
  - General field/grounds per the client's directive.

- The VMS is to be configured to have specific camera views pop-up on video monitoring screens only when activity in their area is sensed.

- The Video system is to be fully integrated and programmed with the ACS system thus providing motion detection information to the ACS and receiving ACS and IDS triggers from the ACS to tell specific cameras to pop-up and start recording.

Intercom Communications System (ICS):

- The intercom system will allow voice communications to remote call/speaker station from a master station or a tablet or smartphone for portal security monitoring and control as might be utilized by an SRO or administrative staff.
  - The stations are strategically placed at main entries to allow for communication to admin/reception area for an initial request to enter from visitor.
  - The station are strategically place at secondary vestibules or doors with card readers which may be used if a staff card or credential is unavailable or fails to operate and the staff and students are requesting to get back into the building.

Lock-down/Lock-In Program

A lock-down program utilizes components from both the architectural and technology-based programs in order to secure the buildings classrooms, areas of shelter (typically larger meeting spaces such as the gymnasium, library, cafeteria) as well as floor by floor when an impending threat occurs. The goal of this program is to secure classroom and large communal spaces, and wings while programmatically pushing the intruder out. A lock-down is initiated by a physical push of a button or other triggering mechanism in a secure area which signals the security system to go into a pre-programed mode of operation. This mode of operation notifies emergency personnel automatically and puts several integrated processes into motion. It is important to note that the school will need to develop their own Lock-Down/Lock-In procedures which are taught and practiced similar to a Fire drill so that staff and students know exactly what to due upon the initiation of a Lock-Down emergency.

The following are components of the lock-down program:

- The deployment of no less than three (3) separate and geographically diverse areas to initiate a lock-down with the physical pressing of a button.

- The locking of specifically designated doors, while allowing code required egress, to compartmentalize wings and large communal areas while rendering all access-controlled credentials non-operational with the exception of override fobs/keys which are held by key

and emergency personnel. This compartmentalization architecturally pushes the intruder to egress as he or she cannot reenter any area and effectively can go nowhere else but out.

- Areas of Lock-Down are:
    - Building perimeter
    - Gymnasium
    - Cafeteria
    - Media Center
    - Library
    - Classroom (with mechanical locks)
    - Stairwell doors

    In areas such as the gymnasium, stairwell doors and the like integration with magnetic door hold open devices that release upon Lock-down will need to be coordinated and integrated for.

- Lock-Down doors at stairwells as well as at least one door at the gymnasium, media center, library, etc. are to have override card readers where emergency personnel will be the only ones with a credential allowing them access.

- The system also locks out the use of elevators which can also only be accessed by personnel having specific override credentials.

- Once initiated the Lock-Down system, through integration, is to send audio and/or video messaging throughout the school informing students, staff and valid visitors that the school is in Lock-Down.

- The Lock-Down system/program is for an LMS internally found threat with the intention of driving the threat out of the school or stopping it from moving further into the school.

The following are components of the lock-in program:

- The lock-in program operates the same except for that it only affects the perimeter doors and entry vestibules – no interior alerts, auto locking or emergency audio/video messaging.
- The Lock-In system/program is for an LMS external or called in threat intended to keep an intruder from entering the school.

Miscellaneous:

- Some LMS district specific items of note are:
    - Video cameras to be of the 2MP variety for general corridor monitoring

- Video cameras to be of the 4MP variety or above for main lobby areas
- They wish to use a fully integrated Genetec system
- ACS Server to be centralized

Security Cuts Package

Leicester Middle School

November 08, 2019

Prepared by:

DVS

A division of Ross&Baruzzini

Index

I. Access Control System (ACS)
- A. ACS Headend – Genetec
- B. Card Readers - HID iCLASS

II. Intrusion Detection System (IDS)
- A. IDS Keypad – DMP Thinline LCD Keypads 7073
- B. Door Contacts – GE Security
- C. Local Audible – NU2 Systems Intelligent Local Door Alarm iLDA #9900
- D. Motion Detectors – Bosch
- E. Duress Button – Sentrol Panic Switch #3040-S
- F. Lockdown Button – STI Stopper Station Series - #SS2xy-S
- G. Door Release Push Button
- H. Glass Break Detectors

III. Video Surveillance System (VSS)
- A. VMS Headend – Genetec Omnicast
- B. Cameras

IV. Security Desk
- A. UPS – CyberPower #EC850LCD
- B. Workstation Monitor - HP Z24n 24-inch Narrow Bezel IPS Display
- C. Workstation – HP Z640 Workstation

V. School Guard Glass
- A. SG4
- B. SG4-IGU
- C. SG5
- D. SG5-IGU

VI. Wall Hardening Details

VII. Security Camera Pole

I.Access Control System (ACS)

A.ACS System - Genetec Synergis - ix

Additional Equipment & Applications

B.Card Readers & Credentials – HID iCLASS

Additional Equipment & Applications

1. MultiCLASS SE Readers RP10/RP15/RP40
2. iCLASS SE Readers
3. iCLASS SE KEY II

I.Access Control System (ACS)

A.ACS – Genetec Synergis - IX

Genetec Synergis™ IX

The power to unify security

Managing security is easier when systems are built to work together. Synergis™ IX hardware merges access control with intrusion monitoring and provides a gateway to our unified platform, Security Center. This means you can unify your video, communications, and other security technology to quickly see what's happening – right across your operation.

Unified access control, intrusion monitoring, video and more

Synergis IX has a large selection of hybrid controllers, interface modules, readers and keypads designed to work with the Genetec™ Security Center Synergis platform. This platform unifies access control and intrusion functions with video surveillance, communications and more. Which means you can reap the benefits of reduced costs, enhanced operational efficiencies, and gain greater insight into your security environment.

Get a complete view of your security

Monitor in real-time everything that is going on in your facility and get a better understanding of your security environment. Investigate in real-time, a variety of different events with the help of live video and detailed event monitoring information. Overall improving agility, and informed decision making.

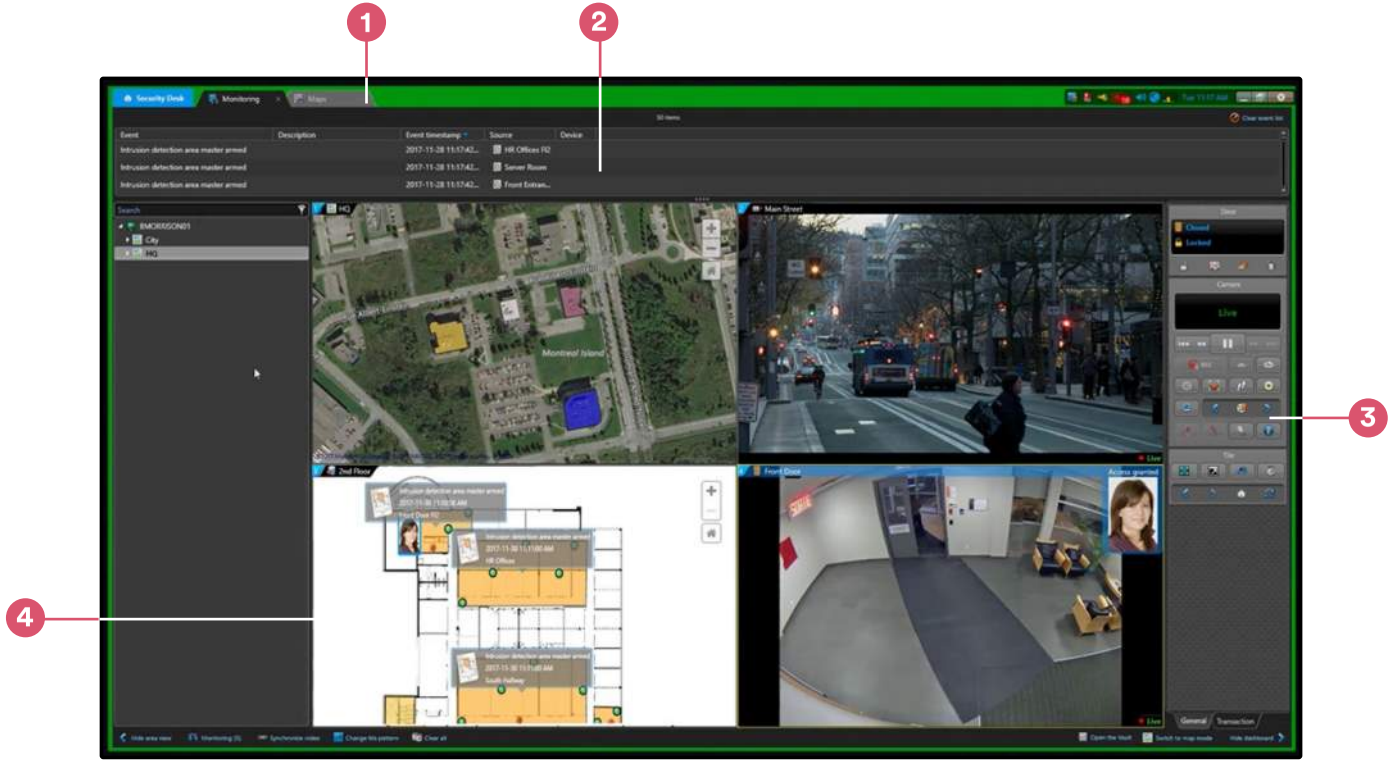

1 Multi-task view
Keep multiple tasks open at the same time to allow your operators to see and do more like manage cardholders, arm and disarm areas, and run reports.

2 Detailed event monitoring
Receive detailed cardholder information for all door and intrusion areas.

3 Access and intrusion widgets
Take quick actions such as unlocking a door, disarming an area, or triggering an output from dynamic widgets.

4 Dynamic graphical maps and dashboards
Better visualize and manage your security environment by dynamically navigating through facilities. Arm and disarm areas, lock and unlock doors directly through the map.

Synergis IX hybrid controllers and interface modules

With a broad range of supported hardware at your disposal, the Synergis IX system lets you control and monitor a scalable number of intrusion areas, doors, cardholders, and other field devices regardless of geographical location.

Synergis Cloud Link

PN: SY-CLOUDLINK

- IP-ready and PoE-enabled intelligent appliance
- Manages up to 16 Synergis IX hybrid controllers
- Up to 256 locks or readers
- Up to 250,000 cardholders and 150,000 offline events

Synergis IX networked hybrid controller

PN: SY-SIX-CTRL-DIN*

- Networked hybrid intelligent controller that provides intrusion detection and access control
- Directly manages 2 doors
- Up to 250 downstream RS-485 interface modules
- Expandable to 128 doors (256 readers), 250 inputs and outputs
- Up to 50,000 cardholders** and up to 50,000 offline events
- In-built offsite communications dialer (ContactID, SIA)

Synergis IX networked single door hybrid controller

PN: SY-SIX-CTRL-DIN-1D

- Networked hybrid intelligent controller that provides intrusion detection and access control
- Directly manages 1 door (RS-485 only)
- Up to 250 downstream RS-485 interface modules
- Expandable to 128 doors (256 readers), 250 inputs and outputs
- Up to 50,000 cardholders** and up to 50,000 offline events
- In-built offsite communications dialer (ContactID, SIA)

Synergis IX dual door module

PN: SY-SIX-RDM2-DIN-485

- Directly manages 2 doors (4 readers)
- 2 reader ports configurable for either Wiegand or RS-485
- 8 multi-purpose inputs
- 2 Form C relay outputs
- Managed by Synergis IX controllers

Synergis IX input modules

PN: SY-SIX-ZX16-DIN

- 16 zone inputs

PN: SY-SIX-ISO16-DIN

- 16 opto-isolated inputs for lift control

PN: SY-SIX-ADC4-DIN**

- 4 channel analog inputs
- Managed by Synergis IX controllers

Synergis IX output module

PN: SY-SIX-PX8-DIN

- 8 Form C relay outputs
- Managed by Synergis IX controllers

Synergis IX IO module

PN: SY-SIX-IO84-DIN

- 8 zone inputs
- 4 high current Form C relay outputs
- Managed by Synergis IX controllers

* Elevator dispatch is not supported at this time but will be in the future.

** Available with the launch of Softwire 10.11

*** Specific values can not be represented in Security center but can be used off line directly through the Synergis IX interface.

Supported Synergis IX DIN Rail enclosures

To facilitate Synergis IX hardware deployments, empty DIN Rail enclosures are available offering customers more customization.

Synergis IX[1] DIN Rail enclosures offer a removable door for fast simple mounting and maintenance. Additional space is also provided above and below the DIN module locations for finger trunking or use of the cable tie points for secure and clean wiring.

[1] Synergis IX is Class 5 compliant. Please reference the deployment guide for installation details.

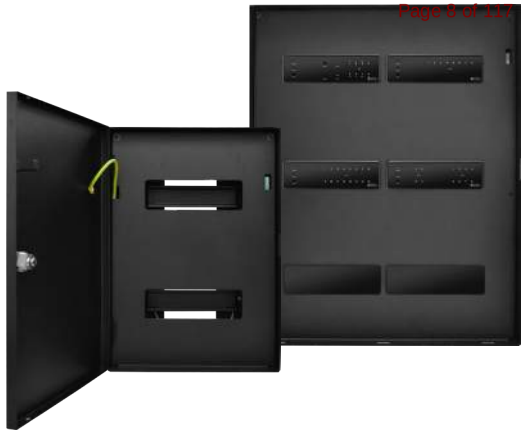

Enclosure dimensions* (Height × Width × Depth)	Enclosure	Comments
400 × 280 × 102 mm	DIN Rail enclosure 1 × 1 PN: SY-SIX-EN-DIN-11	Fits 2 full size DIN Rail modules. Rail Included
400 × 280 × 102 mm	DIN Rail enclosure 1 × 2 PN: SY-SIX-EN-DIN-12	Fits 2 full size and 1 half size DIN Rail modules. Rail Included
400 × 443 × 102 mm	DIN Rail enclosure 2 × 2 PN: SY-SIX-EN-DIN-22	Fits 4 full size DIN Rail modules. Rail Included
550 × 443 × 102 mm	DIN Rail enclosure 2 × 3 PN: SY-SIX-EN-DIN-23	Fits 6 full size DIN Rail modules Rail Included
207 × 615 × 102 mm	DIN Rail enclosure 3 × 1 PN: SY-SIX-EN-DIN-31	Fits 3 full size DIN Rail modules Rail Included
717 × 443 × 102 mm	DIN Rail enclosure 2 × 4 PN: SY-SIX-EN-DIN-24	Fits 8 full size DIN Rail modules Rail Included

Synergis IX features & specifications

The following table presents an overview of Synergis IX capabilities

Key capabilities

- Scheduled area control
- Stay arming mode
- Intrusion panel & Command control
- Disarm delay
- Multiple areas support
- Card and PIN to arm/disarm and lock/unlock
- Automatic re-arm
- Duress PIN
- Unified threat management

Synergis IX hybrid controllers and interface modules							
Model name	Synergis Cloud Link	Synergis IX network controller	Synergis IX PoE controller	Synergis IX dual door module	Synergis IX Input modules	Synergis IX output module	Synergis IX IO module
Communication specifications							
IP ready	●	●	●	-	-	-	-
PoE-enabled	●	-	●	-	-	-	-
RS-485 communication	●	●	●	●	●	●	●
Built-in offsite communications dialer	-	●	●	-	-	-	-

Synergis IX features & specifications

Continued

Synergis IX hybrid controllers and interface modules							
Model name	Synergis Cloud Link	Synergis IX network controller	Synergis IX PoE controller	Synergis IX dual door module	Synergis IX Input modules	Synergis IX output module	Synergis IX IO module
Downstream module, reader, and lock counts							
Onboard reader		4	2	4	–	–	–
Max readers (incl. onboard readers)	256	256	256	4	–	–	–
Max inputs[1]	–	250	250	8	16	–	8
Max analog inputs	–	–	–	–	4	–	–
Max outputs	–	250	250	8	–	8	4
Supported downstream devices	• Synergis IX Network and PoE controller • HID V100, V200, V300 • SALTO SALLIS RS-485 router • SALTO SALLIS IP router • ASSA ABLOY Aperio hub • Assa Abloy IP locks • Mercury EP panels • Axis A1001	Synergis IX door modules and Input and Output modules			Synergis IX readers and keypads		
Max downstream modules	• 16 Synergis IX controllers • 32 VertX V100, V200, V300 • 8 ASSA ABLOY Aperio hubs • 8 SALTO SALLIS RS-485 routers • 8 SALLIS IP routers • 32 Mercury EP panels • 32 Axis A1001	250	250	–	–	–	–
Max locks supported	• 64 ASSA ABLOY Aperio locks • 64 SALTO SALLIS locks • 128 ASSA ABLOY IP locks	–	–	–	–	–	–

[1] Total number of inputs includes dedicated inputs (eg. power monitor, tamper or other). Check manufacturer specifications

Synergis IX architecture

Reduce your total cost of ownership by combining your intrusion monitoring and access control with Synergis IX hybrid controllers and interface modules. Synergis Cloud Link buffers access control and intrusion events to Synergis in real-time and replaces the need to deploy off-the-shelf servers at all remote sites, minimizing your hardware footprint.

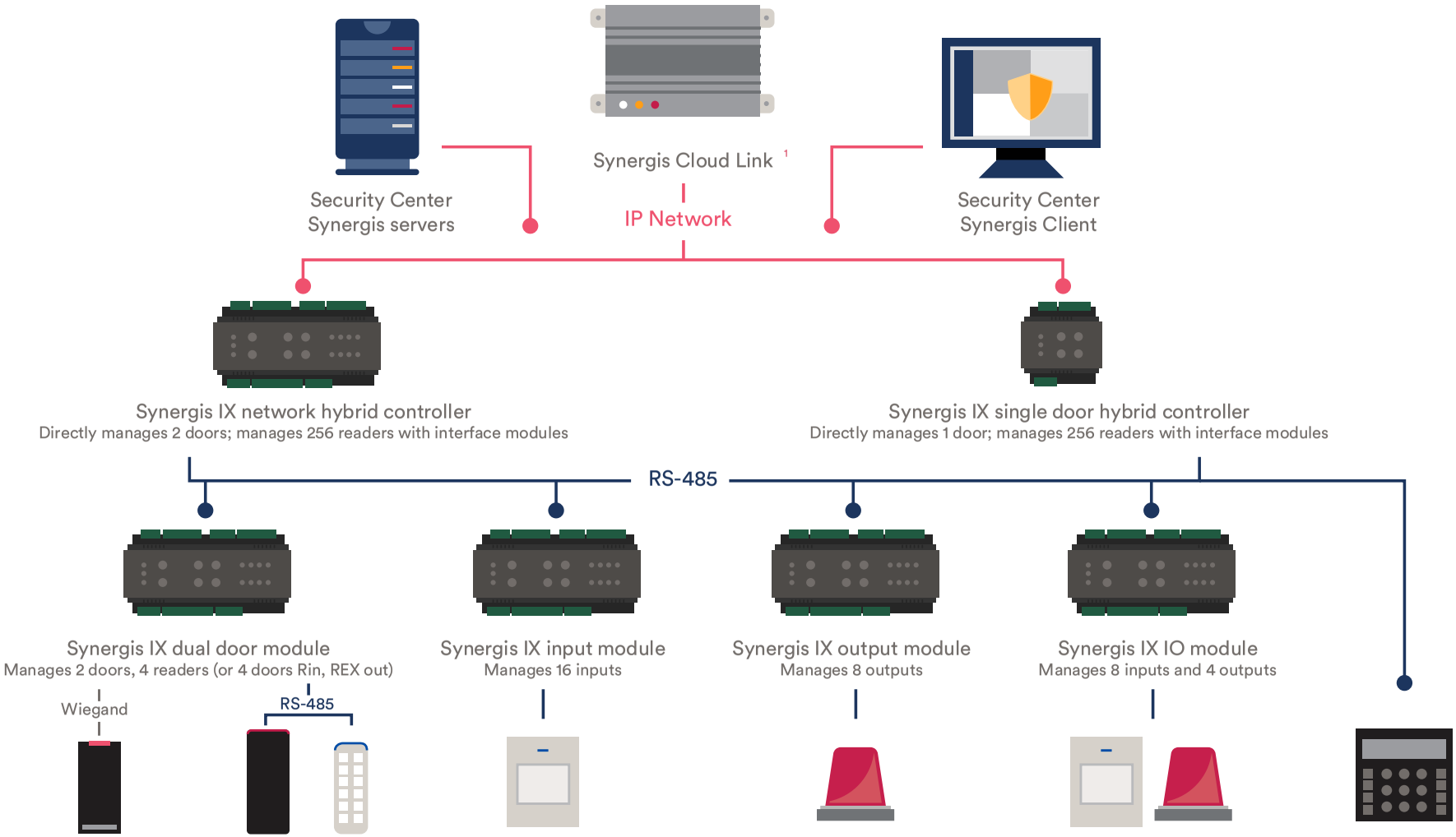

[1] To reduce your hardware footprint for smaller installations, the Synergis Cloud Link firmware can be installed on a Genetec Streamvault appliance

Pair Synergis IX with other non-proprietary hardware

Access control and intrusion systems have traditionally relied on proprietary software and hardware, resulting in limited long-term flexibility. Synergis offers a fresh approach to access control and intrusion monitoring, one that gives you the flexibility to choose the hardware that best meets your security needs. Choosing Synergis will guarantee the long-term viability of your access control and intrusion investment.

A powerful ecosystem of technology partners

Genetec™ actively partners with the security industry's leading manufacturers of access control equipment to bring its vision of open and IP-ready access control to life. As the list of integrated hardware grows over time, rest assured that you'll have access to the latest technology that the physical security industry has to offer.

Hardware that fits your everyday access control needs

Choose your controller

In addition to Synergis IX controllers, Synergis supports some of the most popular controllers on the market including the HID EDGE and VertX EVO controllers, the AXIS A1601 controller and the full line of Mercury Security EP and LP panels.

Wireless electronic locks

For hard to reach locations, leverage wireless locks and unify wired and wireless systems with Synergis. Supported lock brands include SALTO SALLIS, and ASSA ABLOY Aperio, Sargent Corbin Russwin, Allegion Schlage and SimonsVoss SmartIntego.

PoE to the door

To speed up deployments and reduce installation costs, deploy Power-over-Ethernet (PoE) enabled devices such as Synergis Cloud Link, Synergis IX PoE controller, HID EDGE EVO, ASSA ABLOY PoE locks, or the Axis A1001 controller.

Genetec Inc.
genetec.com/locations
info@genetec.com
@genetec

SYNIX_BR4EN_A4

B.Card Readers– HID iCLASS

PHYSICAL ACCESS SOLUTIONS

multiCLASS SE readers include Open Supervised Device Protocol (OSDP), a new Security Industry Association (SIA) standard that together with Secure Channel Protocol (SCP) provides secure communications and central management.

HIGHLY ADAPTABLE AND SECURE HIGH FREQUENCY ACCESS CONTROL SOLUTION

- **Powerfully Secure** – Provides layered security beyond the card media for added protection to identity data using SIOs.
- **Adaptable** – Interoperable with a growing range of technologies and form factors including mobile devices utilizing Seos™.
- **Interoperable** – Open Supervised Device Protocol (OSDP) for secure, bidirectional communication.
- **Streamlined Migration** – Simultaneous support for 125 kHz HID Prox®, Indala®, AWID and EM4102 for seamless migration; field programmable for secure upgrades and extended lifecycle.

HID Global's iCLASS SE® platform goes beyond the traditional smart card model to offer a secure, standards-based and flexible platform that has become the new benchmark for highly adaptable, interoperable and secure access control solutions.

multiCLASS SE® readers simplify migration from legacy technologies with support 125 kHz for HID Prox, Indala, AWID and EM4102, and provide customers the assurance that their existing investments can be leveraged to enhance their system as business requirements change. The technology-independent readers also support iCLASS® Seos™ and iCLASS SE credential platforms, as well as standard iCLASS, MIFARE and MIFARE DESFire EV1 with custom data models and other leading technologies.

Additionally, multiCLASS SE readers support mobile devices utilizing Seos, enabling a new class of portable identity credentials that can be securely provisioned and safely embedded into both fixed and mobile devices.

As part of HID Global's iCLASS SE platform that is based on the Secure Identity Object™ (SIO®) data model and Trusted Identity Platform® (TIP™), the powerfully secure multiCLASS SE readers offer advanced features such as layered security beyond the card media and tamper-proof protection of keys/cryptographic operations using EAL5+ secure element hardware.

POWERFULLY SECURE:
- Multi-Layered Security – Ensures data authenticity and privacy through the multi-layered security of HID's SIO.
- EAL5+ Certified Secure Element Hardware – Provides tamper-proof protection of keys/cryptographic operations.
- SIO Data Binding – Inhibits data cloning by binding an object to a specific credential.
- Secured communications using OSDP with Secure Channel Protocol.

HIGHLY ADAPTABLE:
- Mobile device support using card emulation - Enables HID access control.
- SIO Portability – Provides technology independence and portability to other smart card technologies.
- Upgradeable Hardware Connection – Allows all Wiegand-based communication readers to expand communication capabilities to OSDP, Hi-O and other bidirectional protocols.
- Field Programmable Readers – Provides secure upgrades for migration and extended lifecycle.
- Customization and management from a central location – Enables organization to make changes and manage all attached OSDP readers over RS485 wiring.
- Simultaneous support for 125kHz HID Prox, Indala, AWID and EM4102.
- Allows for support of future technologies.

SUSTAINABILITY AND MANAGEMENT:
- Intelligent Power Management (IPM) – Reduces reader power consumption by as much as 75% compared to standard operating mode.
- Recycled Content – Contributes toward building LEED credits.

INTEROPERABLE:
- SIO Media Mapping – Simplifies deployment of third-party objects to multiple types of credentials.
- Industry standard communications using OSDP.
- Custom programming support to read custom data models on MIFARE and MIFARE DESFire EV1 credentials.

SPECIFICATIONS

	RP10	RP15	RP30	RP40	RPK40
Base Part Number	900P 900L	910P 910L	930P 930L	920P 920L	921P 921L
Typical Read Range[1] (inches)	**13.56 MHz Single Technology ID-1 Credentials (Cards) – SIO Model Data**				
	iCLASS SE®: 2.5″ (6.4 cm) SE for DESFire® EV1: 1″ (2.5 cm) SE for MIFARE® Classic: 2.3″ (5.8 cm)	iCLASS SE®: 2.5″ (6.4 cm) SE for DESFire® EV1: 1″ (2.5 cm) SE for MIFARE® Classic: 2.3″ (5.8 cm)	iCLASS SE: 3.3″ (8.4 cm) SE for DESFire® EV1: 2″ (5.1 cm) SE for MIFARE Classic: 2.3″ (5.8 cm)	iCLASS SE: 4.5″ (11.4 cm) SE for DESFire® EV1: 2″ (5.1 cm) SE for MIFARE Classic: 4″ (10.1 cm)	iCLASS SE: 4.5″ (11.4 cm) SE for DESFire® EV1: 2″ (5.1 cm) SE for MIFARE Classic: 4″ (10.1 cm)
	13.56 MHz Single Technology Tags/Fobs – SIO Data Model				
	iCLASS SE: 1″ (2.5 cm) SE for MIFARE Classic: 0.5″ (1.3 cm)	iCLASS SE: 1″ (2.5 cm) SE for MIFARE Classic: 0.5″ (1.3 cm)	iCLASS SE: 1.5″ (3.8 cm) SE for MIFARE Classic: 1″ (2.5 cm)	iCLASS SE: 2.3″ (5.8 cm) SE for MIFARE Classic: 1.5″ (3.8 cm)	iCLASS SE: 2.3″ (5.8 cm) SE for MIFARE Classic: 1.5″ (3.8 cm)
	125 kHz Single Technology ID-1 Credentials (Cards) – Respective Prox Data Model				
	HID Prox / AWID: 2″ (5.1 cm) Indala Prox: 1″ (2.5 cm) EM4102: 3.5″ (8.9 cm)	HID Prox / AWID: 2″ (5.1 cm) Indala Prox: 1″ (2.5 cm) EM4102: 3.5″ (8.9 cm)	HID Prox / AWID: 2.3″ (5.8 cm) Indala Prox: 1″ (2.5 cm) EM4102: 2″ (5.1 cm)	HID Prox / AWID: 2.5″ (6.4 cm) Indala Prox: 1″ (2.5 cm) EM4102: 4″ (10.2 cm)	HID Prox / AWID: 2.5″ (6.4 cm) Indala Prox: 1″ (2.5 cm) EM4102: 3″ (7.6 cm)
	125 KHz Single Technology Tags/Fobs – Respective Prox Data Model †				
	HID Prox / AWID: 1″ (2.5 cm) Indala Prox: 0.5″ (1.3 cm) EM4102: 1.3″ (3.3 cm)	HID Prox / AWID: 1″ (2.5 cm) Indala Prox: 0.5″ (1.3 cm) EM4102: 1.3″ (3.3 cm)	HID Prox / AWID: 1.3″ (3.3 cm) Indala Prox: 0.5″ (1.3 cm) EM4102: 1.3″ (3.3 cm)	HID Prox / AWID: 1.5″ (3.3 cm) Indala Prox: 0.5″ (1.3 cm) EM4102: 2.3″ (5.8 cm)	HID Prox / AWID: 1.5″ (3.3 cm) Indala Prox: 0.5″ (1.3 cm) EM4102: 2.3″ (5.8 cm)
Mounting	Mini-Mullion Size; physically HID's smallest iCLASS readers and are ideally suited for mullion-mounted door installations, U.S. single-gang J-box (with mud ring) or any flat surface	Mullion Size; physically HID's second smallest iCLASS readers and are ideally suited for mullion-mounted door installations, U.S. single-gang J-box (with mud ring) or any flat surface	EU / APAC Square Size; 83.8 mm (3.3") square reader is designed to mount to and cover standard European and Asian back boxes	Wall Switch Size; designed to mount and cover single gang switch boxes primarily used in the Americas and includes a slotted mounting plate for European and Asian back box spacing	
Color	Black or Gray				
Keypad	No				Yes (4x3)
Dimensions	1.9″ x 4.1″ x 0.9″ 4.8 cm x 10.3 cm x 2.3 cm	1.9″ x 6.0″ x 0.9″ 4.8 cm x 15.3 cm x 2.3 cm	3.3″ x 3.3″ x 0.9″ 8.4 cm x 8.4 cm x 2.3 cm	3.3″ x 4.8″ x 1.0″ 8.4 cm x 12.2 cm x 2.4 cm	3.3″ x 4.8″ x 1.1″ 8.5 cm x 12.2 cm x 2.8 cm
Product Weight (Pigtail)	4.0oz (114g)	5.2oz (149g)	5.3oz (151g)	7.8oz (222g)	9.1oz (258g)
Product Weight (Terminal Strip)	3.0oz (85g)	4.3oz (124g)	4.1oz (118g)	7.6oz (216g)	8.0oz (228g)
Operating Voltage Range	5-16 VDC, Linear supply recommended				
Current Draw - Standard Power Mode[2] (mA)	75	75	85	85	95
Current Draw - Intelligent Power Management (IPM) Mode[2] (mA)	40	40	50	50	70
Peak Current Draw - Standard Power or IPM Mode[2] (mA)	200	200	200	200	200
NSC[3] Power Consumption - Standard Power Mode (W @ 16VDC)	1.2	1.2	1.4	1.4	1.5
NSC[3] Power Consumption - w/ IPM (W @ 16VDC)	0.6	0.6	0.8	0.8	1.1
Operating Temperature	-31º to 150º F (-35º to 65º C)				
Storage Temperature	-67º to 185º F (-55º to 85º C)				
Operating Humidity	5% to 95% relative humidity non-condensing				
Environmental Rating	Indoor/Outdoor IP55; IP65 if installed with optional gasket (IP65GSKT)				
Transmit Frequency	13.56 MHz & 125 kHz				
13.56 MHz Card Compatibility	Secure Identity Object™ (SIO®) on iCLASS Seos, iCLASS SE/SR, MIFARE DESFire EV1 and MIFARE Classic (On by Default) - standard iCLASS Access Control Application (order with Standard interpreter) -ISO14443A (MIFARE) CSN, ISO14443B CSN, ISO15693 CSN - Mifare and Mifare DESFire EV1 custom data models - FeliCa™[4] CSN, CEPAS[4] CSN or CAN				
125 kHz Card Compatibility	HID Prox, AWID, Indala, EM4102				
Communications	Optional OSDP with SCP over RS485 Wiegand/Clock-and-Data Interface 500ft (150m) (22AWG) - Use Shielded cable for best results				
Panel Connection	Pigtail or Terminal Strip				
Certifications	UL294/cUL (US), FCC Certification (US), IC (Canada), CE (EU), C-tick (Australia, New Zealand), SRRC (China), MIC (Korea)[4], NCC (Taiwan)[4], iDA (Singapore)[4], RoHS , FIPS-201 Transparent FASC-N Reader				
Cryto Processor Hardware Common Criteria Rating	EAL5+				
Patents	US7180403, US7439862, US7124943, US5952935, US6058481, US6337619				
Housing Material	UL94 Polycarbonate				
Manufactured with % of recycled content (Pigtail)	10.5%	11.0%	11.0%	10.5%	10.9%
Manufactured with % of recycled content (Terminal Strip)	10.5%	11.0%	10.0%	11.0%	12.3%
UL Ref Number	RP10E	RP15E	RP30E	RP40E	RPK40E
Warranty	Limited Lifetime				

[1] *Typical read range achieved in air. Different types of metal will cause some degradation (typically up to 20%). Use spacers to space product off metal and improve read range if required.*
[2] *Measured in accordance with UL294 standards; See Installation Guide for Details.*
[3] *NSC = Normal Standby Current; See Installation Guide for Details.*
[4] *Not available on 9xxL part numbers.*

North America: +1 512 7776 9000
Toll Free: 1 800 237 7769
Europe, Middle East, Africa: +44 1440 714 850
Asia Pacific: +852 3160 9800
Latin America: +52 55 5081 1650

hidglobal.com

ASSA ABLOY
An ASSA ABLOY Group brand

2016-04-22-hid-multiclass-se-readers-ds-en PLT-00303

PHYSICAL ACCESS SOLUTIONS

HIGHLY ADAPTABLE AND SECURE HIGH FREQUENCY ACCESS CONTROL SOLUTION

- **Powerfully Secure –** Provides layered security beyond the card media for added protection to identity data using SIOs.
- **Adaptable –** Interoperable with a growing range of technologies and form factors including mobile devices utilizing Seos®.
- **Interoperable –** Open Supervised Device Protocol (OSDP) for secure, bidirectional communication.
- **Versatile -** Extended read range is available for applications such as parking and gate control solutions.

HID Global's iCLASS SE® platform goes beyond the traditional smart card model to offer a secure, standards-based and flexible platform that has become the new benchmark for highly adaptable, interoperable and secure access control solutions.

As part of HID Global's iCLASS SE platform for advanced security, the readers utilize state-of-the-art authentication through the platform's Secure Identity Object (SIO) data model for trusted and secure communication between the card and reader to prevent unauthorized access. The iCLASS SE reader line is built on the Security Industry Association (SIA) Open Supervised Device Protocol (OSDP) standard which also ensures secure transmission of data from the reader to the controller.

Additionally, iCLASS SE readers support mobile devices utilizing Seos, enabling a new class of portable identity credentials that can be securely provisioned and safely embedded into both fixed and mobile devices.

iCLASS SE readers include Open Supervised Device Protocol (OSDP), a new Security Industry Association (SIA) standard that together with Secure Channel Protocol (SCP) provides secure communications and central management.

POWERFULLY SECURE:
- Multi-Layered Security – Ensures data authenticity and privacy through the multi-layered security of HID's SIO.
- EAL5+ Certified Secure Element Hardware – Provides tamper-proof protection of keys/cryptographic operations.
- Secured communications using OSDP with Secure Channel Protocol.
- Expanded iCLASS Elite™ Program – Extends private security by protecting uniquely keyed credentials, SIOs and programming keys.

HIGHLY ADAPTABLE:
- Mobile device support using iCLASS Seos - enabling HID access control.
- Flexible to support future technologies.
- Field Programmable Readers – Provides secure upgrades for migration and extended lifecycle.

SUSTAINABILITY AND MANAGEMENT:
- Intelligent Power Management (IPM) – Reduces reader power consumption by as much as 75% compared to standard operating mode.
- Recycled Content – Contributes toward building LEED credits.

INTEROPERABLE:
- SIO Media Mapping – Simplifies deployment of third-party objects to multiple types of credentials.
- Industry standard communications using OSDP.
- Custom programming support to read models on MIFARE and MIFARE DESFire EV1 credentials

HIGH FREQUENCY CONTACTLESS KEY FOB

BASE PART NUMBER: 325X

- **Convenient form factor with greater durability** – Molded, high-impact polymer housing for maximum protection in harsh environments.
- **Part of iCLASS SE® Platform** – For increased security, interoperability and performance.
- **Technology-independent security** – Provides multi-layered security beyond the device technology for added protection to identity data using HID Global's SIO®.
- **Trusted management and distribution of secure identities** – Ensures trusted identity within the iCLASS SE platform of interoperable products.

TECHNOLOGY FEATURES

- Read/write contactless smart card technology for high-speed, reliable communications and high data integrity.
- Meets ISO/IEC 15693 standards for contactless communications.
- Multiple securely separated application areas are each protected by 64-bit diversified read/write keys for data access.
- Long-lasting durability – Passive, no-battery design.
- Strong, environmentally resistant design.
- Variable memory size and memory organization to accommodate a range of application requirements.
- Multi-application capabilities.

HID Global's iCLASS SE® Key Fob is a high-frequency portable credential that makes access control more powerful and more secure through encryption of all radio frequency data transmissions between the key fob and reader using a secure algorithm.

Enclosed in a rugged plastic casing for use in extreme environments, the iCLASS SE Key Fob is the size of a typical car key and can be easily placed on a key ring or lanyard.

The key fob is part of the standards-based iCLASS SE platform, which is based on HID Global's Secure Identity Object® (SIO®) data model and Trusted Identity Platform™ (TIP™). Loaded with an SIO residing inside the iCLASS® chip, those devices deliver increased security with data signatures and encryption to prevent any unauthenticated read access.

The iCLASS SE platform is based on a full ecosystem of interoperable products providing technology-independent and increased security to protect data management and distribution.

The read/write contactless iCLASS SE Key Fob can be used in a variety of applications, including physical access control, PC logon, biometric verification, time and attendance, cashless vending, transit, airline ticketing and customer loyalty programs.

For large deployments, organizations can customize the key fob by incorporating logos and additional elements into the rubber insert on the front of the key fob.

HIGHER SECURITY

- **Trusted Identity Platform™ (TIP™) Enabled** – Provides trusted identity within a secure ecosystem of interoperable products for distribution and management of the SIO® data objects.
- **Multi-layered security** – Ensures data authenticity and privacy through the multi-layered security of HID Global's SIO.
- **SIO data binding** – Inhibits data cloning by binding an object to a specific credential.
- Mutual authentication support with iCLASS technology with encrypted data transfer and 64-bits diversified keys for read/write capabilities.
- **Expanded iCLASS Elite™ Program** – Extends private security by protecting uniquely keyed credentials, SIO's and programming update keys.

SPECIFICATIONS

	iCLASS SE® Key II
Base Part Number	3250 - Memory 2k bit (256 Bytes) 3251 - Memory 16k bit (2k Bytes) card with 2 application areas 3252 - Memory 16k bit (2k Bytes) card with 16 application areas 3253 - Memory 32k bit (4k Bytes) 16k/2+16k/1 3254 - Memory 32k bit (4k Bytes) 16k/16 + 16k/1
Design	Black with blue HID insert
Operating frequency	13.56 MHz
Typical Maximum Read Range	Up to 70 mm (depending the reader in use)
Dimensions	1.555 x 1.25 x 0.235 inches max (3.95 x 3.18 x 0.60 cm)
Construction	Ultrasonically welded ABS Shell with TPE insert
Operating Temperature	-50° to 160° F (-45° to 70° C)
Weight	0.14 oz (4.0g)
Transaction Time	<100 ms Typical
Baud Rate	15693 mode - 26 kbps
Memory Type	EEPROM, read/write
Write Endurance	Min 100,000 erase/write cycles
Data Retention	Min 10 years non-volatile data retention
Slot Punch	Key Ring Hole
HID Managed Services	Customized devices are available through HID Secure Identity Services™ (with customized rubber insert)
Printable	No
Warranty	Lifetime
Options/Accessories	Key Ring sold separately (Part Number: 57-0001-02) Laser marking (with add on price)

hidglobal.com

North America: +1 512 776 9000
Toll Free: 1 800 237 7769
Europe, Middle East, Africa: +44 1440 714 850
Asia Pacific: +852 3160 9800
Latin America: +52 55 5081 1650

2018-03-21-iclass-se-keyfob-II-ds-en PLT-01496

II.Intrusion Detection System (IDS)

A.Door Contacts – GE Security

Options for GE Security Contacts

1. 1072 Series Recessed Magnetic Contacts
2. 1074 Series Recessed Magnetic Contacts
3. 1075T Series Recessed Magnetic Contacts
4. 1078/R1078/1078C/1078CT Series Steel Door Contacts
5. 1125/R1125/1125T/R1125T Series Recessed Magnet

B. Local Audible – NU2 Systems Intelligent Local Door Alarm – iLDA #9900

C. Motion Detectors – Bosch

Options for Bosch Motion Detectors

1. Wall Mount - #ISC-PDL1-W18
2. Ceiling Mount - #ISN-CCI
3. Panoramic - #DS936

D. Duress Button – Sentrol Panic Switch #3040-S

E. Lockdown Button – STI Stopper Station Series - #SS2xy-S

F. Door Release Push Button - Assa Abloy TS-18

G. Glass Break detector - Honeywell

II.Intrusion Detection System (IDS)
A.Door Contacts – GE Security

1072 series recessed magnetic contacts

recessed flanged magnetic contacts with wire leads
3/8 in. dia.

The 1072 series recessed contacts are designed for applications where the added integrity of mounting screws is needed. The contacts work well in both wood and metal frame doors and windows.

The two mounting holes provide additional strength to prevent the contact and magnet from becoming dislodged due to environmental changes. Such changes may occur when the door or window frame warps and misaligns from moisture or the settling of a building. No. 2 sheet metal screws come with the switch.

A wide gap model is available to protect against false alarms from loose-fitting doors and windows.

Specifications

Voltage:	1072: 100 VAC/VDC max. 1074: 30 VAC/VDC max.
Current:	1072: 0.5 A max. 1074: 0.25 A max.
Power:	1072: 7.5 W max. 1074: 3.0 W max.
Loop type:	1072: Closed 1074: Open or closed
Electrical configuration:	1072: Normally open 1074: Open or closed
Gap distance:	1072: Up to 1/2 in. 1072W: Up to 1-1/4 in. 1074: Up to 3/8 in.
Lead type:	1 ft. #22 wire
Dimensions:	1.313 in. L x 0.375 in. dia. (33 x 9.5 mm) with a 0.75 in. (19 mm) dia. flange
Housing:	Flame retardant ABS plastic
Color:	White

- Recessed installation makes contacts less visible, more difficult to detect and defeat
- Corrosion resistant, hermetically sealed switch works well in moist or dusty areas
- Available wider gap distance helps prevent false alarms caused by loose-fitting doors and windows

Ordering information

1072N-10PKG	Recessed flanged magnetic contact with wire leads, 3/8 in. dia., 1/2 in. gap size, white, pk/10
1072W-N	Recessed flanged magnetic contact with wire leads, 3/8 in. dia., 1-1/4 in. gap size, white
1074D-N	Recessed flanged magnetic contact with wire leads, DPDT, 3/8 in. dia., up to 3/8 in. gap size, white

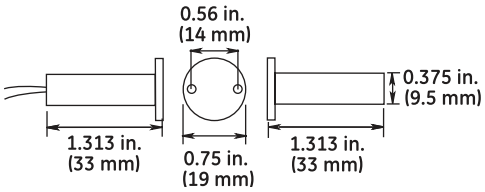

1075 series recessed magnetic contacts

recessed press fit magnetic contacts with wire leads
3/8 in. dia.

The 1075 series press fit switch is a 3/8-inch diameter magnetic contact with wire leads that uses no glue or screws to mount. Small ribs on the housing hold the contact in place. Heavy-duty housing resists crushing from swelling wood.

Use indoors or outdoors for an attractive recessed installation. In addition to wood doors, the 1075 series is useful for protecting china cabinets or closets, double-hung windows, and aluminum windows.

Specifications

Voltage:	1075/1075W: 100 VAC/VDC max. 1070: 30 VAC/VDC max.
Current:	1075/1075W: 0.5 A max. 1070: 0.25 A max.
Power:	1075/1075W: 7.5 W max. 1070: 3.0 W max.
Loop type:	1075/1075W: Closed 1070: Open or closed
Electrical configuration:	1075/1075W: Normally open 1070: SPDT
Gap distance:	1075/1070: Up to 1/2 in. 1075W: Up to 1-1/4 in.
Dimensions:	1.313 in. L x 0.375 in. dia. (33 x 9.5 mm)
Housing:	Flame retardant ABS plastic
Color:	White or mahogany brown
Regulatory:	UL, CUL

- Press fit design makes installation easy no screws or glue needed
- Heavy-duty housing resists crushing
- Attractive, added security of recessed installation
- Available wider gap distance helps prevent false alarms caused by loose-fitting doors and windows
- Reliably field proven for more than 20 years
- UL listed for indoor and outdoor use

Ordering information

1075N-10PKG (-50BOX)	Recessed press fit magnetic contact with wire leads, 3/8 in. dia., 1/2 in. gap size, closed loop, white, pk/10 (pk/50 -50BOX)
1075M-10PKG	Recessed press fit magnetic contact with wire leads, 3/8 in. dia., 1/2 in. gap size, closed loop, mahogany brown, pk/10
1075WN-10PKG (-50BOX)	Recessed press fit magnetic contact with wire leads, 3/8 in. dia., wide gap, 1-1/4 in. gap size, closed loop, white, pk/10 (pk/50 -50BOX)
1075WM-10PKG	Recessed press fit magnetic contact with wire leads, 3/8 in. dia., wide gap, 1-1/4 in. gap size, closed loop, mahogany brown, pk/10
1070-10PKG	Recessed press fit magnetic contact with wire leads, 3/8 in. dia., 1/2 in. gap size, SPDT, white, pk/10
1902-N	Empty shell for 1075 series, white
1924N-10PKG	Magnet for 1075 series, white, pk/10
1924M-10PKG	Magnet for 1075 series, mahogany brown, pk/10

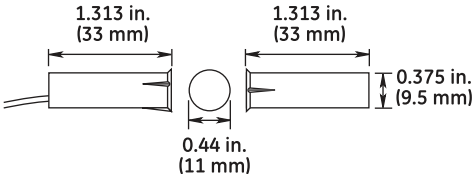

1075T series recessed magnetic contacts

recessed press fit magnetic contacts with terminals
3/8 in. dia.

The 1075T series press fit terminal switches are 3/8-inch diameter magnetic contacts with terminal connections. The contacts use no glue or screws to mount; small ribs on the housings hold them in place. The heavy-duty housing resists crushing from swelling wood.

The 1075T's terminal connection adds to the ease of installation. Simply strip the wire, insert it into the terminal block, and tighten. The terminal accepts any wire size from 14 to 22 gauge, and has a unique one-piece design for added strength.

Use the contacts indoors or outdoors for an attractive recessed installation. The 1075T can also be used to protect china cabinets or closets, double-hung windows, and aluminum windows.

Specifications

Voltage:	100 VAC/VDC max.
Current:	0.5 A max.
Power:	7.5 W max.
Loop type:	Closed
Electrical configuration:	Normally open
Gap distance:	1075T: Up to 1/2 in. 1075TW: Up to 1-1/4 in.
Lead type:	1 ft. #22 wire
Dimensions:	1.63 in. L x 0.375 in. dia. (41 x 9.5 mm) with a 0.375 in. (9.5 mm) dia. flange
Housing:	Flame retardant ABS plastic
Color:	White

- Press fit design and terminal connections dramatically reduce installation time
- Terminals accept 14 to 22 gauge wire
- Available wider gap distance helps prevent false alarms caused by loose-fitting doors and windows

Ordering information

1075TN-10PKG	Recessed press fit magnetic contact with terminals, 3/8 in. dia., 1/2 in. gap size, white, pk/10
1075TW-N	Recessed press fit magnetic contact with terminals, 3/8 in. dia., 1-1/4 in. gap size, white
1924N-10PKG	Magnet for 1075 series, white, pk/10

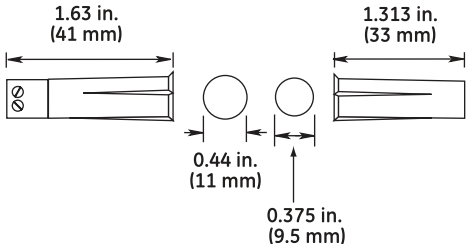

1078 series steel door contacts

recessed steel door magnetic contacts with wire leads
1 in. dia.

The 1078 series recessed contacts are designed specifically for use in the steel doors commonly found in commercial building applications.

The unique housing design of the 1078 contact features a rugged unibody construction with flexible ribbed sides for quick, secure installation without gluing. The magnet housing isolates the magnet from the surrounding steel for maximum gap distances.

A wide gap model is available to protect against false alarms from loose-fitting doors.

Specifications

Voltage:	1078: 100 VAC/VDC max.; 1076: 30 VAC/VDC max.
Current:	1078: 0.5 A max.; 1076: 0.25 A max.
Power:	1078: 7.5 W max.; 1076: 3.0 W max.
Loop type:	1078: Closed; 1076: Open or Closed
Electrical configuration:	1078: Normally open; 1076: SPDT; 1076D: DPDT
Lead type:	1 ft. #22 wire
Gap distance:	1078/1076: Up to 1/2 in. 1078W/1076W: Up to 1 in.
Dimensions:	1.125 in. L x 1.125 in. dia. (29 x 29 mm)
Housing:	Flame retardant ABS plastic
Color:	White, brown, gray
Regulatory:	UL, CUL

Ordering information

1078N-10PKG (-50BOX)	Recessed steel door contact w/ leads, 1 in. dia., 1/2 in. gap size, closed loop, white, pk/10 (pk/50 -50BOX)
1078M-10PKG (-50BOX)	Recessed steel door contact w/ leads, 1 in. dia., 1/2 in. gap size, closed loop, brown, pk/10 (pk/50 -50BOX)
1078WN-10PKG (-50BOX)	Recessed steel door contact w/ leads, 1 in. dia., 1 in. gap size, closed loop, white, pk/10 (pk/50 -50BOX)
1078WM-10PKG (-50BOX)	Recessed steel door contact w/ leads, 1 in. dia., 1 in. gap size, closed loop, brown, pk/10 (pk/50 -50BOX)
1078WG-10PKG (-50BOX)	Recessed steel door contact w/ leads, 1 in. dia., 1 in. gap size, closed loop, gray, pk/10 (pk/50 -50BOX)
1076N-10PKG (-50BOX)	Recessed steel door contact w/ leads, 1 in. dia., 1/2 in. gap size, SPDT, white, pk/10 (pk/50 -50BOX)
1076M-10PKG (-50BOX)	Recessed steel door contact w/ leads, 1 in. dia., 1/2 in. gap size, SPDT, brown, pk/10 (pk/50 -50BOX)
1076G-10PKG (-50BOX)	Recessed steel door contact w/ leads, 1 in. dia., 1/2 in. gap size, SPDT, gray, pk/10 (pk/50 -50BOX)
1076W-N	Recessed steel door contact w/ leads, 1 in. dia., 1 in. gap size, SPDT, white
1076W-M	Recessed steel door contact w/ leads, 1 in. dia., 1 in. gap size, SPDT, brown
1076H-N	Recessed steel door contact w/ leads, 1 in. dia., 1/2 in. gap size, SPDT, biased for higher security, white
1076DN-10PKG (-50BOX)	Recessed steel door contact w/ leads, 1 in. dia., 1/2 in. gap size, DPDT, white, pk/10 (pk/50 -50BOX)
1076DM-10PKG (-50BOX)	Recessed steel door contact w/ leads, 1 in. dia., 1/2 in. gap size, DPDT, brown, pk/10 (pk/50 -50BOX)
1076DG-10PKG (-50BOX)	Recessed steel door contact w/ leads, 1 in. dia., 1/2 in. gap size, DPDT, gray, pk/10 (pk/50 -50BOX)

- Special design for steel mounting
- Rugged unibody construction for maximum durability and reliability
- Recessed installation makes contacts less visible and more difficult to detect and defeat
- Available wider gap distance helps prevent false alarms caused by loose-fitting doors and windows
- High Security models available
- Rare Earth Magnet designed for steel door with top channel available
- UL listed for specific fire doors

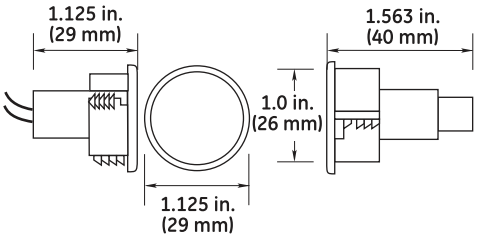

R1078 series steel door contacts

Mini-Max™ recessed steel door magnetic contacts with Rare Earth magnets and wire leads, 1 in. dia.

The 1078 series recessed contacts are designed specifically for use in the steel doors commonly found in commercial building applications.

The unique housing design of the 1078 contact features a rugged unibody construction with flexible ribbed sides for quick, secure installation without gluing. The magnet housing isolates the magnet from the surrounding steel for maximum gap distances.

The Rare Earth magnet is designed for use in metal entry/exit doors with a channel in the top of the door. The magnet eliminates the need to cut a mounting hole in the door channel. The flexible magnet housing can be compressed to accommodate a variety of channel widths for quick, easy installation. Adhesive is recommended.

Specifications

Voltage:	R1078: 100 VAC/VDC max. R1076: 30 VAC/VDC max.
Current:	R1078: 0.5 A max. R1076: 0.25 A max.
Power:	R1078: 7.5 W max. R1076: 3.0 W max.
Loop type:	R1078: Closed R1076: Open or closed
Electrical configuration:	R1078: Normally open R1076: SPDT
Lead type:	1 ft. #22 wire
Gap distance:	Up to 1/2 in.
Dimensions:	1.125 in. L x 1.125 in. dia. (29 x 29 mm)
Housing:	Flame retardant ABS plastic
Color:	White, brown

- Special design for mounting in top channel of steel doors
- Special ribbed sides allow for easy installation
- Rugged unibody construction for maximum durability and reliability

Ordering information

R1078N-10PKG	Recessed steel door magnetic contact with wire leads, 1 in. dia., 1/2 in. gap size, closedl loop, white, pk/10
R1078M-10PKG	Recessed steel door magnetic contact with wire leads, 1 in. dia., 1/2 in. gap size, closed loop, brown, pk/10
R1076DN-10PKG	Recessed steel door magnetic contact with wire leads, 1 in. dia., 1/2 in. gap size, SPDT, white, pk/10
R1076DM-10PKG	Recessed steel door magnetic contact with wire leads, 1 in. dia., 1/2 in. gap size, SPDT, brown, pk/10

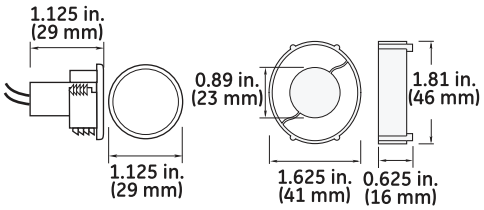

1078C series steel door contacts

recessed steel door magnetic contacts with wire leads
3/4 in. dia.

The 1078C series recessed contacts are designed specifically for use in the steel doors commonly found in commercial building applications.

The unique housing design of the 1078C contact features a rugged unibody construction with flexible ribbed sides for quick, secure installation without gluing. The magnet housing isolates the magnet from the surrounding steel for maximum gap distances.

A wide gap model is available to protect against false alarms from loose-fitting doors, and a high security model is also available.

Specifications

Voltage:	1078C: 100 VAC/VDC max.; 1076C: 30 VAC/VDC max.
Current:	1078C: 0.5 A max.; 1076C: 0.25 A max.
Power:	1078C: 7.5 W max.; 1076C: 3.0 W max.
Loop type:	1078C: Closed; 1076C: Open or closed
Electrical configuration:	1078C: Normally open; 1076C: SPDT
Lead type:	1 ft. #22 wire
Gap distance:	1078C/1076C: Up to 7/8 in. (3/8 in. steel) 1078CW/1076CW: Up to 2 in. (3/4 in. steel)
Dimensions:	1.125 in. L x 0.875 in. dia. (29 x 22 mm)
Housing:	Flame retardant ABS plastic
Color:	White, brown, gray

- 3/4-inch diameter for easier drilling in metal
- Special ribbed sides allow for easy installation
- Rugged unibody construction for maximum durability and reliability
- Recessed installation makes contacts less visible and more difficult to detect and defeat
- Available wider gap distance helps prevent false alarms caused by loose-fitting doors and windows

Ordering information

1078CN-10PKG (-50BOX)	Recessed steel door contact with wire leads, 3/4 in. dia., closed loop, white, pk/10 (pk/50 -50BOX)
1078CM-50BOX	Recessed steel door contact with wire leads, 3/4 in. dia., 3/8 in. gap size, brown, pk/50
1078CG-10PKG (-50BOX)	Recessed steel door contact with wire leads, 3/4 in. dia., closed loop, gray, pk/10 (pk/50 -50BOX)
1078CWN-10PKG (-50BOX)	Recessed steel door contact with wire leads, 3/4 in. dia., wide gap, closed loop, white, pk/10 (pk/50 -50BOX)
1078CWM-10PKG (-50BOX)	Recessed steel door contact with wire leads, 3/4 in. dia., wide gap, closed loop, brown, pk/10 (pk/50 -50BOX)
1078CWG-10PKG	Recessed steel door contact with wire leads, 3/4 in. dia., wide gap, closed loop, gray, pk/10
1076CN-50BOX	Recessed steel door contact with wire leads, 3/4 in. dia., SPDT, white, pk/50
1076CM-10PKG	Recessed steel door contact with wire leads, 3/4 in. dia., SPDT, brown, pk/10
1076CG-10PKG	Recessed steel door contact with wire leads, 3/4 in. dia., SPDT, gray, pk/10
1076CDN-10PKG	Recessed steel door contact with wire leads, 3/4 in. dia., white, pk/10
1076CW-N	Recessed steel door contact with wire leads, 3/4 in. dia., wide gap, SPDT, white
1076CW-M	Recessed steel door contact with wire leads, 3/4 in. dia., wide gap SPDT, brown
1076CH-N	Recessed steel door contact with wire leads, 3/4 in. dia., biased for higher security applications, SPDT, white
1076CH-M	Recessed steel door contact with wire leads, 3/4 in. dia., biased for higher security applications, SPDT, brown

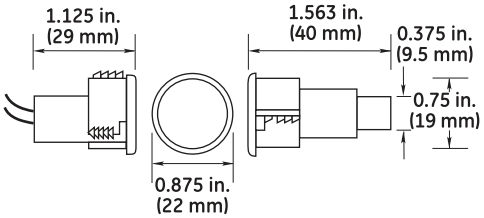

GE
Security

Magnetic Contacts
Recessed Mount

1078CT series steel door contacts

recessed steel door magnetic contacts with terminals 3/4 in. dia.

The 1078CT series recessed contacts are designed specifically for use in the steel doors commonly found in commercial building applications.

The unique housing design of the 1078CT contact features a rugged unibody construction with flexible ribbed sides for quick, secure installation without gluing. The magnet housing isolates the magnet from the surrounding steel for maximum gap distances.

A terminal connection makes installation easy. Terminals accept any wire size from 14 to 22 gauge and has a unique one-piece design.

A wide gap model is available to protect against false alarms from loose-fitting doors.

Specifications

Voltage:	100 VAC/VDC max.
Current:	0.5 A max.
Power:	7.5 W max.
Loop type:	Closed
Electrical configuration:	Normally open
Lead type:	1 ft. #22 wire
Gap distance:	1078CT: Up to 7/8 in. 1078CTW: Up to 2 in.
Dimensions:	1.625 in. L x 0.938 in. dia. (41 x 24 mm)
Housing:	Flame retardant ABS plastic
Color:	White, brown

Ordering information

1078CTN-10PKG (-50BOX)	Recessed steel door magnetic contact with terminals, 3/4 in. dia., 7/8 in. gap size (3/8 in. steel), white, pk/10 (pk/50 -50BOX)
1078CTM-10PKG	Recessed steel door magnetic contact with terminals, 3/4 in. dia., 7/8 in. gap size (3/8 in. steel), brown, pk/10
1078CTWN-10PKG	Recessed steel door magnetic contact with terminals, 3/4 in. dia., wide gap, 2 in. gap size (3/4 in. steel), white, pk/10

- 3/4-inch diameter for easier drilling in metal
- Terminals allow for easy installation
- Rugged unibody construction for maximum durability and reliability
- Recessed installation makes contacts less visible and more difficult to detect and defeat
- Available wider gap distance helps prevent false alarms caused by loose-fitting doors and windows

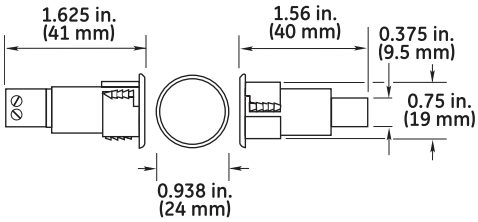

GE
Security

Magnetic Contacts
Recessed Mount

1125 series recessed magnetic contacts

recessed stubby press fit magnetic contacts with wire leads 3/8 in. dia.

The 1125 series stubby press fit magnetic contact is a 3/8-inch diameter switch designed specifically for applications where space is limited.

The 1125's short length makes it ideal for thin-framed windows and doors where longer units cannot be used. Press fit ribs on the housing make installation quick and easy.

Specifications

Voltage:	100 VAC/VDC max.
Current:	0.5 A max.
Power:	7.5 W max.
Loop type:	Closed
Electrical configuration:	Normally open
Gap distance:	1125: Up to 1/4 in. 1125W: Up to 3/4 in. 1125WB: Up to 1-3/8 in.
Lead type:	1 ft. #22 wire
Dimensions:	1125: 0.75 in. L x 0.375 in. dia. (19 x 9.5 mm) 1125W: 1.25 in. L x 0.375 in. dia. (32 x 9.5 mm) 1125WB: 0.75 in. L x 0.375 in. dia. (19 x 9.5 mm)
Housing:	Flame retardant ABS plastic
Color:	White or mahogany brown (1125 only)

Ordering information

1125N-10PKG (-50BOX)	Recessed stubby press fit magnetic contact with wire leads, 3/8 in. dia., 1/4 in. gap size, white, pk/10 (pk/50 -50BOX)
1125M-10PKG	Recessed stubby press fit magnetic contact with wire leads, 3/8 in. dia., 1/4 in. gap size, mahogany brown, pk/10
1125WN-10PKG	Recessed stubby press fit magnetic contact with wire leads, 3/8 in. dia., 3/4 in. gap size, white, pk/10
1125WBN-10PKG	Recessed stubby press fit magnetic contact with wire leads, 3/8 in. dia.,1-3/8 in. gap size. bare neodymium magnet, pk/10
1946N-10PKG	Magnet for 1125 series, white, pk/10

- Press fit design makes installation easy no screws or glue needed
- Small size perfect for thin-framed windows and doors
- Good for use in vinyl-clad and custom windows
- Ideal for pre-wiring; eliminates forcing switch and pre-wire into the same header hole
- Available wider gap distance helps prevent false alarms caused by loose-fitting doors and windows

1125

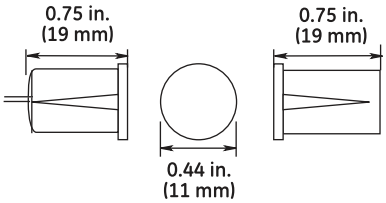

1125W

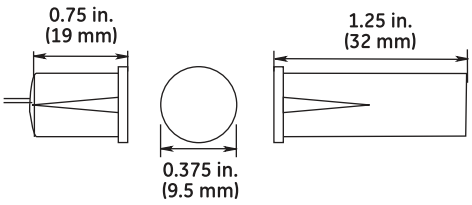

GE
Security

Magnetic Contacts
Recessed Mount

R1125 series recessed magnetic contacts

Mini-Max™ recessed stubby press fit magnetic contacts with Rare Earth magnets and wire leads, 3/8 in. dia.

The R1125 switch is a stubby press fit magnetic contact with a Mini-Max™ magnet. Mini-Max magnets deliver strong protection in a low-profile design and virtually eliminate the risk of window damage during installation. Just 1/8 inch thick, the magnets mount easily to any surface with glue, double-stick tape (included), or one stainless steel screw (included).

The R1125 is designed specifically for applications where space is limited. Its short length makes it ideal for thin-framed windows and doors where larger switches cannot be used. Press fit ribs on the contact's housing make installation quick and easy. A wide gap model offers added protection for loose-fitting doors and windows.

Specifications

Voltage:	100 VAC/VDC max.
Current:	0.5 A max.
Power:	7.5 W max.
Loop type:	Closed
Electrical configuration:	Normally open
Gap distance:	R1125: Up to 1/2 in. R1125W: Up to 7/8 in.
Lead type:	1 ft. #22 wire
Dimensions:	0.75 in. L x 0.44 in. dia. (33 x 11 mm)
Housing:	Flame retardant ABS plastic
Color:	White
Regulatory:	UL, CUL

Ordering information

R1125N-10PKG	Recessed stubby press fit magnetic contact with wire leads and Mini-Max magnet, 3/8 in. dia., 1/2 in. gap size, white, pk/10
R1125WN-10PKG	Recessed stubby press fit magnetic contact with wire leads and Mini-Max magnet, 3/8 in. dia., wide gap, 7/8 in. gap size, white, pk/10
1830-10PKG	Mini-Max rare earth magnet, 3/8 in. dia. x 1/8 in. H, wide gap, includes tape and stainless steel screw, pk/10
1835-10PKG	Mini-Max rare earth magnet, 5/8 in. dia. x 1/8 in. H, wide gap, includes tape and stainless steel screw, pk/10

- Rare-earth magnet technology delivers powerful magnetic force
- Magnets mount easily with glue, double-stick tape, or one stainless steel screw
- Ideal for vinyl-clad and custom windows
- Wide gap model available

R1125

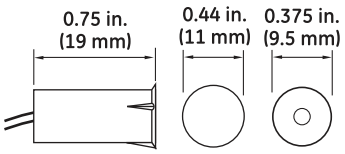

R1125W

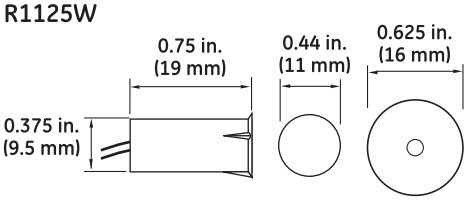

GE
Security

Magnetic Contacts
Recessed Mount

1125T series recessed magnetic contacts

recessed stubby magnetic contacts with terminals
3/8 in. dia.

The 1125T stubby press fit magnetic contact is designed specifically for applications where space is limited. The contact's short length makes it ideal for thin-framed windows and doors where longer units cannot be used.

The terminal connection adds to ease of installation. Simply strip the wire, insert it into the terminal block, and tighten. The terminal accepts any wire size from 14 to 22 gauge and has a special one-piece construction for added strength and durability.

A wide gap model is available to protect against false alarms from loose-fitting doors and windows.

Specifications

Voltage:	100 VAC/VDC max.
Current:	0.5 A max.
Power:	7.5 W max.
Loop type:	Closed
Electrical configuration:	Normally open
Gap distance:	1125T: Up to 1/4 in. 1125TW: Up to 3/4 in.
Dimensions:	1.08 in. L x 0.375 in. dia. (27 x 9.5 mm)
Housing:	Flame retardant ABS plastic
Color:	White

Ordering information

1125TN-10PKG	Recessed stubby magnetic contact with terminals, 3/8 in. dia., 1/4 in. gap size, white, pk/10
1125TWN-10PKG	Recessed stubby magnetic contact with terminals, 3/8 in. dia., wide gap, 3/4 in. gap size, white, pk/10
1924N-10PKG	Magnet for 1125TW, white, pk/10
1946N-10PKG	Magnet for 1125T series, white, pk/10

- Drastically reduces installation time
- Ideal for pre-wire installations
- Terminals accept 14 to 22 gauge wire
- Available wider gap distance helps prevent false alarms caused by loose-fitting doors and windows

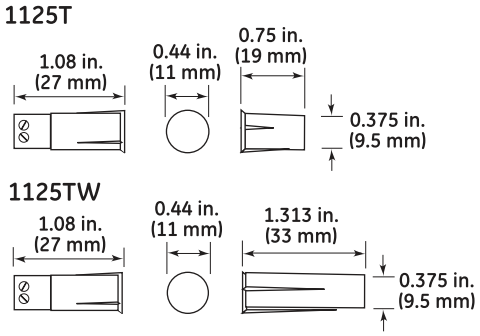

GE
Security

Magnetic Contacts
Recessed Mount

R1125T series recessed magnetic contacts

Mini-Max™ recessed stubby press fit magnetic contacts with Rare Earth magnets and terminals, 3/8 in. dia.

The R1125T stubby press fit magnetic contacts with Mini-Max magnets are designed specifically for applications where space is limited, such as thin-framed windows and doors.

Mini-Max magnets deliver strong protection in a low-profile design and virtually eliminate the risk of window damage during installation. Just 1/8 inch thick, the magnets mount easily to any surface with glue, double-stick tape (included), or a stainless steel screw (included).

The terminal connection adds to ease of installation. Simply strip the wire, insert it into the terminal block, and tighten. The terminal accepts any wire size from 14 to 22 gauge and has a special one-piece construction for added strength and durability.

Specifications

Voltage:	100 VAC/VDC max.
Current:	0.5 A max.
Power:	7.5 W max.
Loop type:	Closed
Electrical configuration:	Normally open
Gap distance:	R1125T: Up to 1/2 in. R1125TW: Up to 7/8 in.
Dimensions:	1.08 in. L x 0.375 in. dia. (27 x 9.5 mm)
Housing:	Flame retardant ABS plastic
Color:	White

Ordering information

R1125TN-10PKG (-50BOX)	Recessed stubby press fit magnetic contact with Mini-Max magnet and terminals, 3/8 in. dia., 1/2 in. gap size, white, pk/10 (pk/50 -50BOX)
R1125TWN-10PKG	Recessed flanged magnetic contact with Mini-Max magnet and terminals, 3/8 in. dia., wide gap, 7/8 in. gap size, white, pk/10

- Terminal design is easy to connect
- Rare-earth magnet technology delivers powerful magnetic force
- Magnets mount easily with glue, double-sided tape, or stainless steel screws
- Ideal for vinyl-clad and custom windows
- Available wider gap distance helps prevent false alarms caused by loose-fitting doors and windows

R1125T

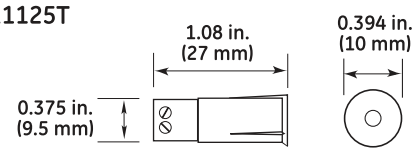

R1125TW

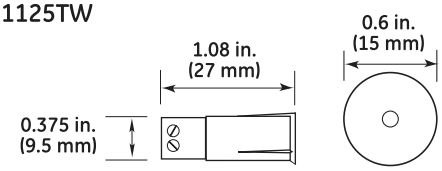

1090 series recessed ANSI switches

Specifically designed for recessed ANSI door cut-out applications, the 1090 series is approved for specific fire doors rated up to and including 3h (hours).

Total encapsulation coupled with recessed mounting prevents access to the switch, cabling, or external magnet tampering.

Specifications

Voltage:	30 VAC/VDC max.
Current:	0.25 A max.
Power:	3.0 W max.
Loop type:	Open or Closed
Electrical configuration:	SPDT
Gap distance:	Up to 1 in.
Lead type:	1 ft. #22 wire
Dimensions (HxWxD):	4.875 x 1.25 x 0.50 in. (124 x 32 x 13 mm)

Ordering information

1090-G	Recessed ANSI switch, SPDT

- Recessed installation for standard ANSI cut-outs
- Approved for specific fire doors

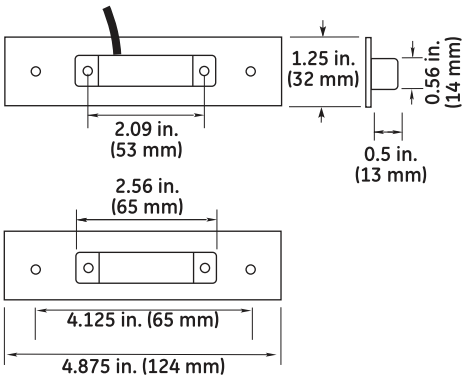

II.Intrusion Detection System (IDS)

B.Local Audible – NU2 Systems Intelligent Local Door Alarm – iLDA #9900

iLDA #9900

Patents Pending

NU2 Systems

INTELLIGENT LOCAL DOOR ALARM

The Intelligent Local Door Alarm (iLDA) is an innovative Bluetooth enabled, flexible local door alarm controller/monitor.

WWW.NU2SYSTEMS.COM 155 LAFAYETTE AVENUE, WHITE PLAINS, NY, 10603 INFO@NU2SYSTEMS.COM

NU2 Systems

The Intelligent Local Door Alarm (iLDA)

is an innovative Bluetooth enabled, flexible local door alarm controller/monitor.

The iLDA controller is installed by any free egress emergency exit perimeter door or protected areas to monitor, manage and alarm the door, maintain life safety code requirements while maintaining the building's security. The iLDA is suited for **use in schools, hospitals, airports, daycare centers, courthouses, office complexes and any building that requires to secure, monitor and alarm non-lockable security doors.**

Via Bluetooth and using the iLDA app, installers and administrators can change configuration, timers, functionality, display etc. as well as add / delete user's digital key fob without the need to remove the unit off the wall.

Remote monitoring and management of the iLDA is done from any stand-alone guard station or via interface to the building's access control system. iLDA operates from 12v-24v AC or DC, has 5 programmable inputs and 4 programmable form C relay outputs. Outputs are supervised via built in selector jumpers for dry form C, for 1K or 1K/2K EOL supervision. No need for external EOL resistor kits.

2.4" Hi-Res Screen

iButton Key Fob

Custom Features

iLDA #9900
FEATURES

Easy installation
Flexible functionality
Supervised inputs
Interface to any Access Control
Local/Remote Alarms
Heavy Duty Aluminum Panel
Built-in EOL termination
Bluetooth/ RS-485 enabled
Custom Finishes

Via use of any mobile device, the display can be further customized to show device's location, company name or logo, installing company's name, support phone numbers etc. there are total of 5 programmable lines.

» Selectable inputs are: Door Status Monitor (DSM/DC), shunt, bypass, alarm reset or shunt/reset. Additionally, iLDA controller monitors door's electrified lock power (V-SENSE) and shunts the unit when door unlocks by the building's access control.

The 4 programmable outputs allow monitoring of: alarm condition, bypass status, door 'held' status and door contact 'mimic' condition. There is no need to drill for multiple DSM contacts. For certain specialized applications, the built in Fire Alarm (F/A) input automatically removes power from the 'lock' relay as well.

iLDA has dedicated outputs for remote Red/Green LEDs as well as 2.4" graphical display showing multiple door conditions such as: Door is secured, door in alarm, door is held open, door in bypass as well as multiple timers in count up/count down mode.

iLDA is available with iButton digital key fob or alternatively with 26 bit HID micro reader.

» **iLDA's** database stores 150 digital 'keys' and their user's name. Export feature allows for quick cloning of multiple **iLDAs** without the need for data reentry. Users and digital keys can be added/removed via the mobile device. No need to duplicate and distribute traditional mechanical keys.

iLDA controller has a built in RS-485 port for either 'chaining' iLDAs or for communication with OEM products. **iLDA** 9900 uses an open architecture platform allowing for easy third-party integration and thus is highly suitable for the OEM marketplace. The **iLDA** 9900 is part of a family of integrated products that include the Intelligent Mantrap Controller (iMTC) and the Smart Power Supply (sPS-5000) and UIB/ACM.

Easy to install using distributed architecture, the iMTC is scalable from 2 to 8 protected doors. sPS-5000 is a networked or RS-485 managed power supply with built in graphic display, providing 4 managed output voltages with digital over-current breakers.

Technical Specifications

A 2.4" Hi-Resolution TFT 224ppi graphical display provides the ability to show & control:

2.4" Hi-Res Screen

- Door is Secured
- Authorized Exit mode
- Door Pre-Alarm with displayed timer countdown
- Door in Alarm with displayed timer countdown
- Door Held Open with displayed timer countdown
- Unit is in Programming Mode

In addition to the door's status the display also provides for:

- Header text – such as "Loading Dock"
- Footer text – such as www.mycompany.com
- Additional text – 3 lines to show company name, branch, floor or others
- Company Logo – can be used as display background
- Timers – displays condition's Count up/down timer
- Diagnostics – inputs and outputs active/inactive status

Mobile Application

Auto Discovery and Automatic Pairing via Bluetooth with 2 level passwords.

Users

- Can momentary shunt iLDA locally – such as "x seconds"
- Can shunt iLDA for a period of time – such as "hh:mm"
- Can silence/reset alarm locally without use of iButton
- View authorized user's list and fob ID numbers

Administrator

- Define and program inputs, output, timers and tamper
- Enable/Disable users and iButton fobs
- Add/modify display text
- Save/ Import/ Export configuration

Clock/Calendar

The iLDA has an accurate built in Clock/Calendar processor. Using the mobile app, events can be programmed well in advance to take place at a specific time/date. For example, the iLDA can be programmed to automatically shunt itself on "Friday, June 7th from 8AM to 5PM…".

IButton Key Fob

iButton Key Fob

Each fob has a unique ID. Using the mobile app, fobs can be added or deleted (lost/stolen) and be associated to a specific person. This data is maintained in the individual iLDA's memory. No mechanical keys are needed.

Usage

Presenting the fob once will shunt the iLDA for the pre-programmed time period. Presenting the fob twice will place the iLDA in permanent bypass mode. Additional presentation returns the iLDA back to normal.

Features

- Digital key (not traditional mechanical)
- Uniquely serialized/non-duplicable
- No battery needed
- Quick add/delete via app – lost/stolen keys
- Database holds 150 fob# and user's name

iButton Reader

iLDA utilized industry standard iButton with dual color built in LED. LED color/flash rate supplement the graphical display. The reader provides needed power to the fob. As such, fob does not require a battery.

Inputs

6 programmable inputs. Mobile app selected for EOL Supervised or just NC/NO. Input's active/inactive status is shown on the display as green/blue circle-- Defaults are:

IN1 – Shunt/Bypass and/or Silence/Reset

- When in Secure Mode:
- Momentary – shunts for preprogrammed time
- Maintained – Bypass door alarm until reset

In Alarm mode

- For simplified wiring the same screw terminals can also silence/reset local alarm.

IN2 – Lock Voltage sense:

- Shunt/bypass unit on lock voltage change from normal
- Will sense any lock voltage from from 8VDC/AC to 28VDC/AC
- Supports Fail Safe or Fail Secure Locks

IN3 – NC Door Contact

- Dry or EOL supervised
- Resets unused remaining time and returns the unit back to secure mode

IN4 – Alarm Reset/Silence

IN5 – Spare

IN6 – Spare

IN9 – Reed switch Tamper:

- Bluetooth app enabled/disabled

Outputs

Four (4) relays are available

Output's active/inactive status is shown on the display as green/blue square

- Each provides Form-C terminals
- Contacts rated @ 2A
- Individual status shown on the display
- Built-in EOL supervision of the NC relay contacts. Jumper selected NC, 1k, 1k/2k.
- For cleaner wiring - No need for external EOL resistor kit!

Default Settings are:

Relay 1 – Door Contact Mimic. In this mode RLY1 changes state to follow the door contact's status. This can be interfaced to building's access control, burglar alarm etc. There is no need to drill multiple door contacts into the door's frame.

Relay 2 – Door held Open Alarm

Relay 3 – Door Forced Open Alarm

Relay 4 – Door is in Bypass Mode

Note: These relays can connect to any stand-alone monitoring/control station or to the building's access control system for further processing.

Communications

-Bluetooth enabled for management and monitoring

-RS-485 port for special applications / OEM interfaces

Custom Features

The iLDA utilizes a powerful Bluetooth enabled processor and as such can be additionally configured for countless other custom needs. Contact company for customized configurations.

Rear-view of iLDA
Wiring Diagram

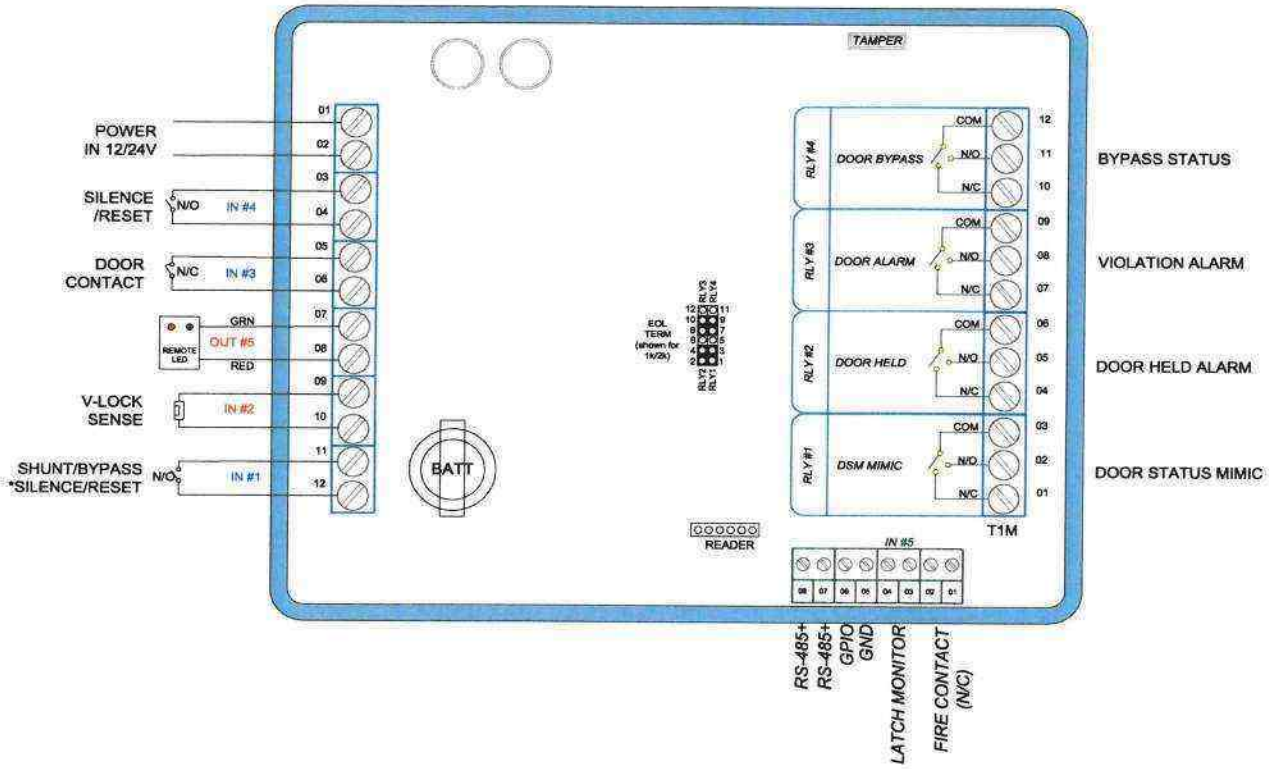

General Specifications

Operating Power
10VDC/AC to 28VDC/AC. 50ma current draw.

Dimensions
Fits into a standard 2 gang electrical box, no need for extra deep or wide box.

Terminal Screws
Removable connectors with 2 x 12 screws, 1 x 8 screws and 3.5mm spacing.

Remote Indicator
The iLDA has built in RED and GREEN LED driver to support 16 remote plates as needed. Such indicators can be installed at guard stations, opposite the iLDA unit etc.

Programming
Via Bluetooth, using the iLDA app installers and administrators can change configuration, timers, functionality etc as well as add/delete user's key fob without the need to remove the unit off the wall.

II.Intrusion Detection System (IDS)

C.Motion Detectors – Bosch

Professional Series TriTech+ Motion Detectors

www.boschsecurity.com

BOSCH
Invented for life

- 18 m x 25 m (60 ft x 80 ft) coverage, field selectable to 8 m x 10 m (25 ft x 33 ft)
- EN50131-2-4 Grade 2 compliant
- Sensor data fusion technology
- Tri-focus optics technology
- Range adaptive radar

The ISC-PDL1-W18x Professional Series TriTech Detectors are exceptionally suited for commercial indoor applications. Sensor data fusion technology ensures that the detectors send alarm conditions based on precise information. Tri-focus optics eliminate coverage gaps and respond efficiently to intruders. The powerful combination of unique features in the Professional Series delivers superior catch performance and virtually eliminates false alarms.
The self-locking two-piece enclosure, built-in bubble level, flexible mounting height, and three optional mounting brackets simplify installation and reduce service time.

Functions

Sensor Data Fusion Technology
Sensor data fusion technology is a unique feature that uses a sophisticated software algorithm to gather signals from five sensors: two pyroelectric sensors, range adaptive radar, a room temperature sensor, and a white light level sensor. The microcontroller analyzes and compares the sensor data to make the most intelligent alarm decisions in the security industry.

Tri-focus Optics Technology
Tri-focus optics technology uses optics with three specific focal lengths: long-range coverage, middle-range coverage, and short-range coverage. The detector applies the three focal lengths to 86 detection zones, which combine to make 11 solid curtains of detection. Tri-focus optics technology also includes two pyroelectric sensors, which deliver twice the standard optical gain. The sensors process multiple signals to deliver precise performance virtually free of false alarms.

Range Adaptive Radar
The microwave transceiver automatically adjusts its detection thresholds based on input from the PIR sensors. Integrating the target audience distance information from the PIR significantly reduces false alarms from the microwave Doppler radar.

ISN-CC1 Ceiling Mount PIR Detectors

www.boschsecurity.com

BOSCH
Invented for life

- DIP switch settings
- Mirror switch for easy adjustments to coverage patterns
- 14 m (46 ft) wide angle coverage (ISN-CC1-50W)
- 30 m (98 ft) long range coverage (ISN-CC1-100N)

The ISN-CC1 Ceiling Mount Detectors include the ISN-CC1-50W and the ISN-CC1-100N models. Both models have adjustable mirrors and sensitivity levels for flexibility.

Functions

DIP Switch Settings
Use DIP switches to select a setting for the light emitting diode (LED), relay, and sensitivity. In the ISN-CC1-50W Ceiling Mount Detector, use the DIP switch to set pulse count.

Indicators
Both detector models have one LED that emits red light when the detector activates an alarm. You can set the alarm LED to on or off. The LED flashes when power is initially applied and when the detector experiences a malfunction.

Self-Diagnosis
Both detector models monitor for technical malfunctions. The Alarm LED flashes to indicate a problem.

Certifications and approvals

Region	Certification	
USA	UL	ANSR: Intrusion Detection Units (UL639) CC1

Installation/configuration notes

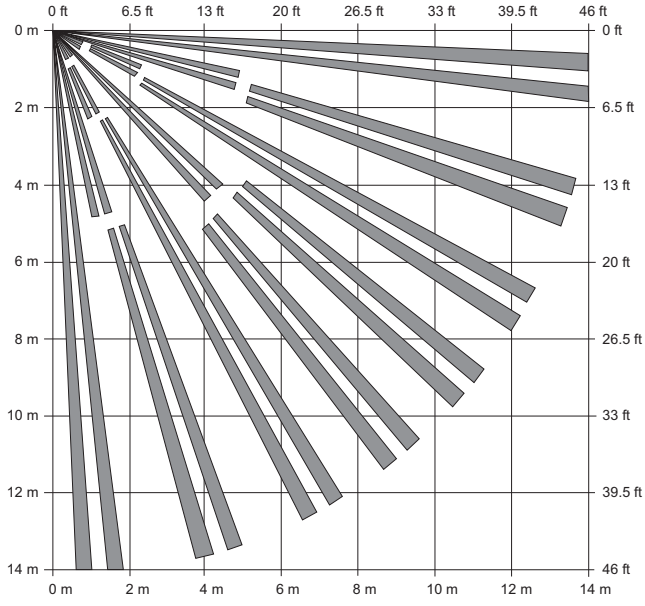

Top View
ISN-CC1-50W wide angle coverage: 14 m (46 ft) maximum range, 15 zone pairs, and 30 fingers.

DS936 Low Profile Panoramic PIR Detector

www.boschsecurity.com

BOSCH
Invented for life

- Enhanced signal processing
- 360° x 7.5 m (24 ft) pattern
- Surface/semi-flush mountable
- Internal pointability
- Sealed detector chamber

The ceiling mount, low profile panoramic DS936 PIR Detector uses alternate polarity pulse count. It also uses a pointable Fresnel lens to provide up to 7.5 m (24 ft) of coverage and can be mounted on the surface, or semi-flush directly to a ceiling or a standard octagonal electrical box.

Functions

Enhanced Signal Processing
Field-selectable for standard, intermediate or high.

Test Features
External visible alarm LED. Internal noise voltage test pins provide precise pattern location and background disturbance evaluation using a standard analog meter.

Certifications and approvals

Europe	DS936 complies with EN50131-1, Grade 2

Region	Certification	
Europe	CE	2004/108/EC EMC Directive (EMC); 2006/95/EC Low-Voltage Directive (LVD); 2011/65/EU Restriction of the
USA	UL	DS936: ANSR: Intrusion Detection Units (UL639)
China	CCC	2009031901000548

Installation/configuration notes

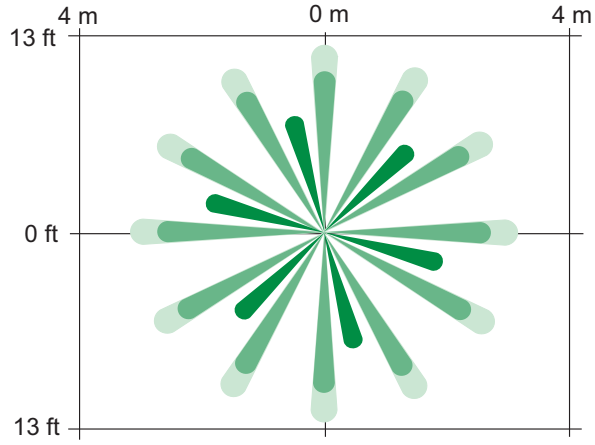

Top View
Broad Coverage: Up to 7.5 m x 360° (24 ft x 360°). Provides 360° coverage pattern. Coverage diameter is approximately two times the mounting height.

II.Intrusion Detection System (IDS)

D. Duress Button – Sentrol Panic Switch #3040-S

SENTROL

PRODUCT INFORMATION BULLETIN

Model 3040 shown above;
Model 3045 shown on right.

3040 SERIES PANIC SWITCH

Model numbers:
3040, 3045, 3050, 3055

- **Easy installation**
- **Latching LED and non-LED models available**
- **3050 and 3055 feature glowing LED for low light visibility**

The Sentrol 3040 Series Panic Switch activates the SPDT switch (SPST on the 3045 model) when the user pulls the actuating lever. On the 3040 model, an external LED lights and latches, indicating that the alarm circuit has been activated. The lever is closed first to rearm the alarm switch, then the latching LED circuit is reset externally at the host panel. The 3045 model has no LED or latching circuit.

The 3050 and 3055 feature a glowing LED for low light visibility. The LED glows green when powered up, turns red upon activation. The 3050 contains a latching LED, the 3055 is non-latching.

Applications

Mounted out of sight but within easy reach for manual activation, such as under desks or counters in banks, jewelry stores and other facilities where people or property are at risk. The 3045 and 3055 models can be used in residential installations when a panic switch is needed. Models with the LED and latching circuit, can be used as a panic switch in medical care facilities. All models provide low-profile and reliable alarm protection.

continued

Sentrol 3040 Series Panic Switch

Architect and Engineering Specifications

The unit consists of a housing that contains the electrical circuitry and magnetic reed contacts, a cover plate to protect the internal electronics and an actuating lever with an Alnico V magnet installed in a cradle in the lever. When the lever is fully closed, the magnet — in proximity to the reed — triggers the circuit. The alarm occurs when the actuating lever is moved 20° to 45° past the fully closed position (approximately 1" from the fully closed position). On the latching models, an LED on the unit flashes and latches when the lever is opened. It can be reset only at the alarm panel.

The actuating lever, housing and cover plate are made of ABS fire-retardant plastic. Dimensions of the unit are 1.77" W x 2.90" L x 0.76" H (4.50 cm W x 7.37 cm L x 1.93 cm H). The unit has 12 feet of jacket lead. The device mounts to the surface with two No. 6 combo-head screws, 5/8" and 1 1/4". Available in white.

Specifications:

Model 3040, 3050, 3055

Nominal Voltage ..... 12 V DC @ 6 mA
Current ..... Max 8 mA
Operational Voltage ..... 7 V DC to 15 V DC
Temperature Range ..... 0° to 110°F (-17.8°C to 43.3°C)
Dimensions ..... 1.77" W x 2.90" L x 0.76" H (4.50 cm W x 7.37 cm L x 1.93 cm H)
Weight ..... 1.5 oz.
Housing Material ..... ABS plastic

Form C: 3040 only

Voltage: ..... 30 V
DC max.Current: ..... 0.25 A max.
Power: ..... 3 W max.

Model 3045

Temperature Range ..... -40° to 150°F (-40°C to 65.6°C)
Dimensions ..... 1.77" W x 2.90" L x 0.76" H (4.50 cm W x 7.37 cm L x 1.93 cm H)
Weight ..... 1.5 oz.
Housing Material ..... ABS plastic

Form A: 3045 only

Voltage: ..... 100 V DC max.
Current: ..... 0.5 A max.
Power: ..... 7.5 W max.

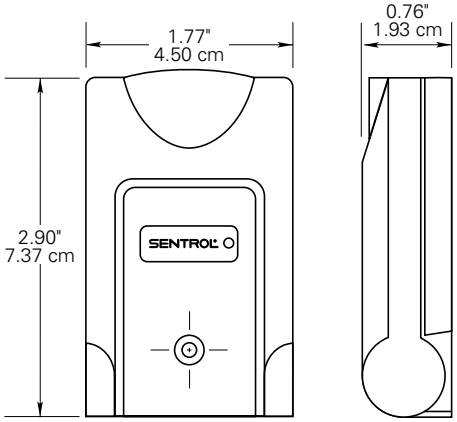

3040, 3050, 3055
(No LED on 3045)

Ordering Information

Model Number	LED	Latching Circuit	Electrical Loop Type	Configuration	Color
3040	Red	Yes	Open or Closed	SPDT	White
3045	None	No	Closed	SPST	White
3050	Bi-color	Yes	Open or Closed	SPDT	White
3055	Bi-color	No	Open or Closed	SPDT	White

SENTROL
DVS

CORPORATE HEADQUARTERS
12345 SW Leveton Dr., Tualatin, OR 97062
Tel.: 503.692.4052 Fax: 503.691.7566
http://www.sentrol.com
U.S. & Canada: 800.547.2556
Technical Service: 800.648.7424
FaxBack: 800.483.2495

II.Intrusion Detection System (IDS)

E. Lockdown Button – STI Stopper Station Series - #SS2xy-S

STI STOPPER® STATION SERIES

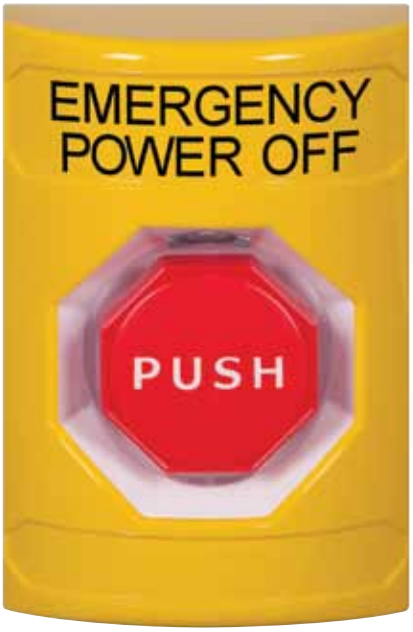

c UL us
ADA
Compliant
CE
See Reverse
For Details

KEY FEATURES

General Information

- Multipurpose push button switches cover a wide range of applications both indoors and outdoors.
- Three year guarantee against breakage of polycarbonate in normal use (one year on electro mechanical and electronic components).

Design

- Unique, curved design helps protect against accidental activation.

Construction

- Station housing molded of tough polycarbonate.
- UL Listed to U.S. and Canadian safety standards.
- Stainless steel backplate.
- Push buttons are ADA Compliant (excludes “3” key switch button).

Installation

- 5VA flammability rating on backplate and spacer.
- Typical working properties of polycarbonate are -40° to 250°F (-40° to 121°C).
- Polycarbonate complies with FDA regulations for food contact applications.

Options

- Your choice of colors — red, green, yellow, white or blue.
- Standard or custom text or hi-res logo.
- Custom text in any language.
- Protect with STI indoor/outdoor protective covers.

PRODUCT OVERVIEW

These ADA Compliant, multipurpose push button switches cover a wide range of applications both indoors and outdoors. They’re called Stopper Stations. They incorporate a unique, patented design that helps dramatically to stop accidental activation. A number of standard models are available or we can create custom units to meet your needs exactly. You have your choice of any of five universal shell colors, several button styles, standard or custom wording and language.

HOW THEY WORK

Because of their superior, patented design combined with quality construction throughout, you can expect outstanding performance for years to come. In fact, many STI customers are surprised to find that all this quality is available at no increase in price. Plus, customers appreciate the option to protect the switches with STI protective covers that carry a three year guarantee against breakage in normal use, one year on electro mechanical and electronic components. For indoor applications, you can order your Stopper Station with a pre-alarm cover to help stop malicious and accidental activation.

STI Stopper® Station Series

Dimensions and Technical Information

UNIQUE BUTTON FEATURES

Models SS2xy0, SS2xy1, SS2xy3, SS2xy4

- Interchangeable or replaceable N.O. or N.C., SPST gold-plated contact blocks rated for 6 amps @ 600 VAC or 1 amp @ 250 VDC.
- Standard switch includes one N.O. and one N.C. contact. Holds up to three sets of isolated contacts.

Note: some standard single gang boxes need additional depth. To add 5/8" depth, order KIT-102722-color (B=blue, G=green, R=red, Y=yellow, W=white)

Models SS2xy2, SS2xy5, SS2xy9

- Two (2) Form "C" contacts, DPDT, rated 10 amps @ 125/250 VAC, 1/2 HP, 6 amps @ 30 VDC.

Models SS2xy8

- Switch rating 10 amps @ 240 VAC resistive and has a timer range: 2 - 60 seconds (± 15%).
- Indoor use only. Not recommended for outdoor/water applications, temperature range of button 15° to 120°F (-9° to +49°C).
- Timer life of over 1,000,000 operations.
- Pneumatic adjustable timer opens or closes a circuit and has a timed delay before reset. No electricity to operate.
- Ideal for security applications.
- 1 Form Z, 1 N.O. and 1 N.C. contact.

***Note:** x = color, y = cover, see page 4 for details.

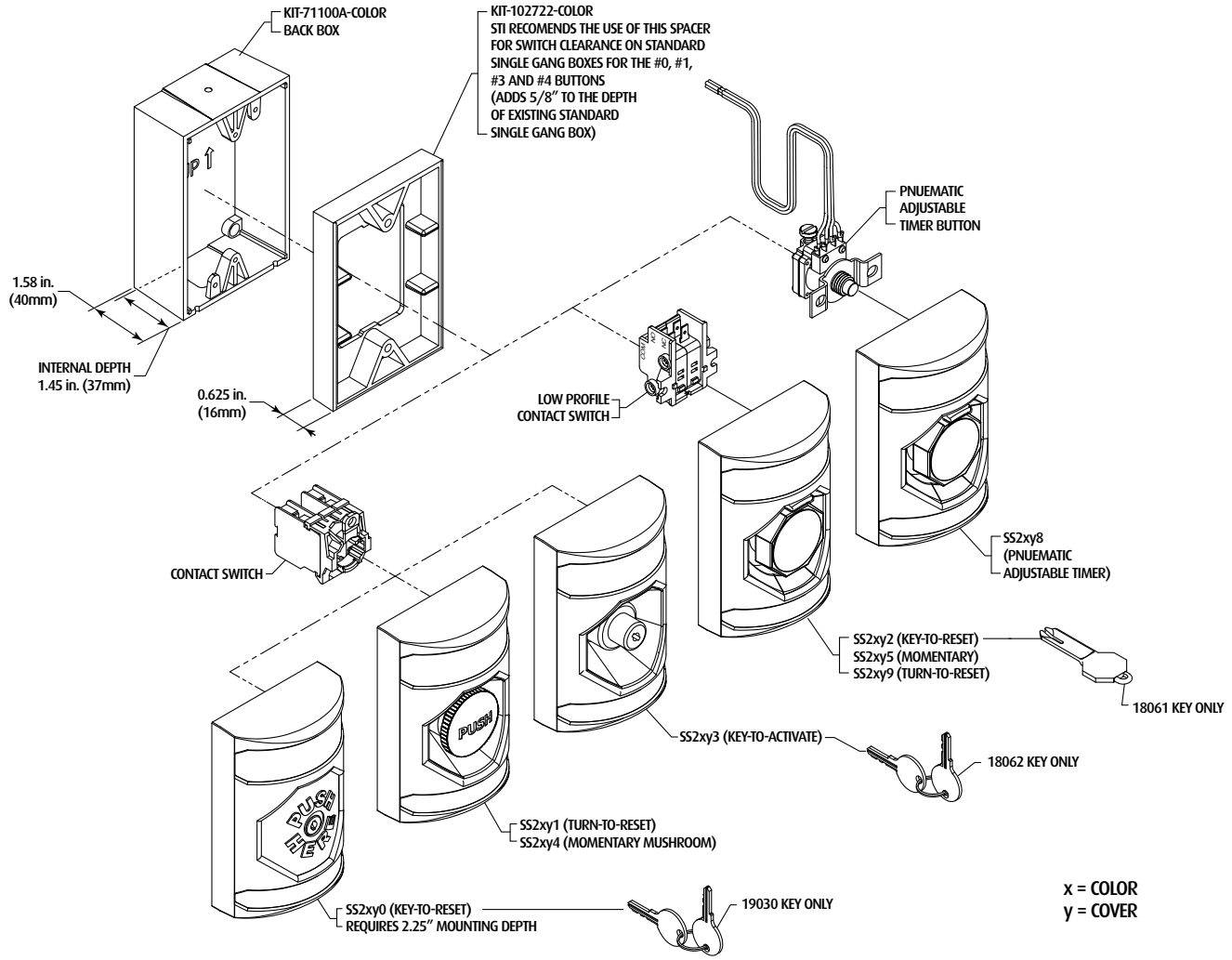

II.Intrusion Detection System (IDS)

F. Push Button Door Release– Assa Abloy Alarm Controls # TS-18

MODEL TS-18

UNDER COUNTER/DESK DOOR RELEASE WITH MOMENTARY PUSHBUTTON

- MOMENTARY PUSHBUTTON
- S.P.D.T. CONTACTS, RATED 4 AMP. @ 28 VDC
- SWITCH TERMINATED WITH COLORED LEADS
- PUSHBUTTON PROTECTED WITH 1” DIA, GUARD RING
- BLACK ABS PLASTIC BOX WITH TWO MOUNTING EARS
- SIZE: 1” H x 1.5” W x 2” L
- U.L. APPROVED & C.S.A. CERTFIED COMPONENTS

ALARM CONTROLS CORPORATION
19 BRANDYWINE DRIVE DEER PARK, NY 11729
1 631 586-4220 1 800 645-5538
WWW.ALARMCONTROLS.COM EMAIL INFO@ALARMCONTROLS.COM

V. School Guard Glass

A. SG4

B. SG4-IGU

C.SG5

D.SG5-IGU

FlexGuard® Glassbreak Detectors

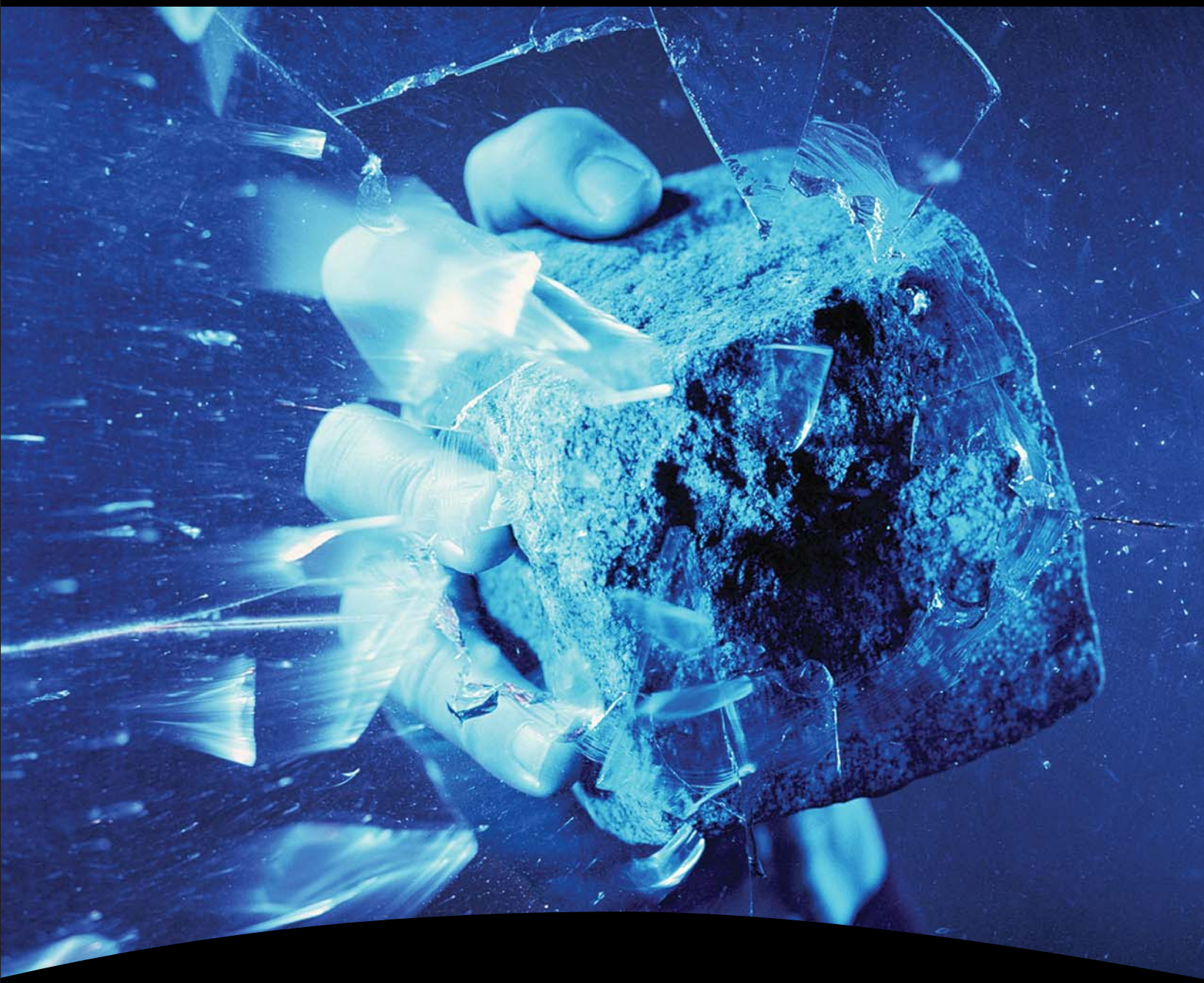

The First Line of Defense

Honeywell

The Ultimate Protection

A Legacy of Proven Performance

A blend of head-turning style and sophisticated technology, FlexGuard is the industry's most versatile glassbreak detector—the only one to offer a choice of hardwired, wireless or V-Plex® polling loop technology for the ultimate in flexibility. It's no wonder there are millions of FlexGuards protecting homes and businesses worldwide—more than all other glassbreak detectors combined!

Style Meets Technology

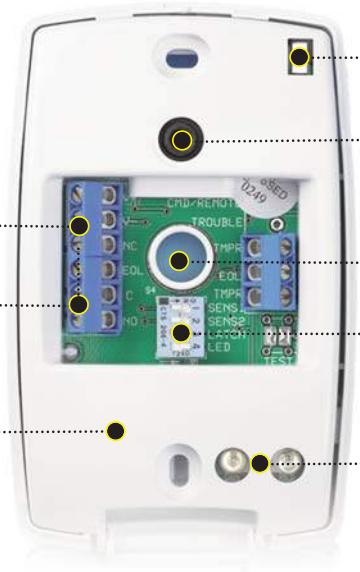

FlexGuard glassbreaks feature a modern, leading-edge design that's simple, uncluttered and blends with any décor. Whether choosing hardwired, wireless or V-Plex polling loop versions, all FlexGuard glassbreaks share the same sleek, sophisticated design. They are ideally suited for use in both residential and light commercial applications.

Installation-Friendly Flush Mount Designs

The FG-1625RFM mounts in a one-inch diameter hole on walls or ceilings and is the perfect choice when aesthetics are a concern.

The generous physical design of the FG-1625F adequately covers the size of any single gangbox.

Staggered "T" terminals ensure a secure connection while speeding up installations.

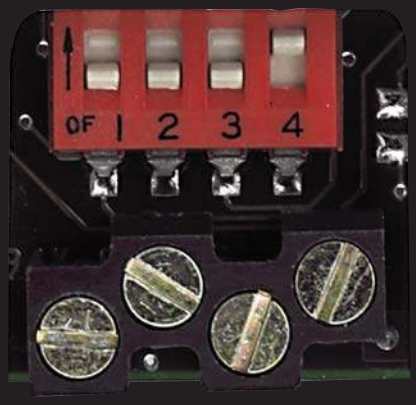

FG-1625RFM Wiring Terminals

Designed with the Installer in Mind

Captive Mounting Holes

Specially engineered mounting holes hold screws in place while mounting the detector, making installation a snap. In addition, our hinged covers are designed to open almost a full 180º for

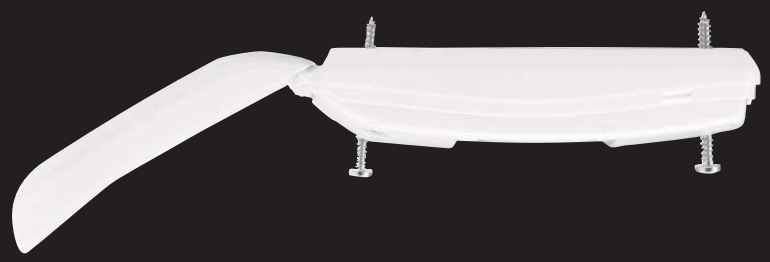

Trouble-free Installation

FlexGuard detectors mount virtually anywhere—on walls, window frames or ceilings—and are UL, ULC and CE listed for all glass types, including plate, tempered, laminated, wired, film-coated and sealed insulated. What's more, FlexGuards are rigorously challenged in test rooms built to exceed the toughest SIA standards.

The patented FG-701 Glassbreak Simulator (shown at left) can activate and deactivate the test mode from up to 15 feet away. It is compatible for testing all Honeywell brand glassbreak detectors.

Your Trusted Partner of Choice

Dealers and installers worldwide rely on Honeywell's patented FlexGuard technology for:

- Uncompromising detection
- Trouble-free installation and service
- Increased customer satisfaction and retention

Provide your customers with the highest level of security.

As the world's leading security sensor manufacturer, Honeywell focused its unmatched expertise to create FlexGuard—a series of glassbreak detectors that provide the best possible perimeter protection by keeping the intruder outside.

You can rely on FlexGuard sensors as a first line of defense because they make perimeter protection as easy to provide—and trouble free—as any other part of the system. Your customers can enjoy the highest level of security possible without any installation headaches or costly service calls.

As an add-on sale, FlexGuard separates you from the competition by providing your customers with the protection and peace of mind they deserve.

FlexGuard Glassbreak Detectors

FG-1625

- Surface mount design
- No minimum range
- 25' maximum range

FG-1615

- Surface mount design
- No minimum range
- 15' maximum range

FG-1625F

- Flush mount design
- No minimum range
- 25' maximum range

FG-1625R

- Round surface mount design
- No minimum range
- 25' maximum range

FG-1625SN

- V-Plex surface mount design
- No minimum range
- 25' maximum range

FG-1608

- Surface mount design with built-in contact
- No minimum range
- 8' maximum range

5853

- Wireless surface mount design
- No minimum range
- 25' maximum range

FG-1625RFM

- 1.0" round flush mount design
- No minimum range
- 25' maximum range

For more information:
www.honeywell.com/security/hsc

Automation and Control Solutions
Honeywell Security & Communications
2 Corporate Center Dr. Suite 100
P.O. Box 9040
Melville, NY 11747
1.800.467.5875
www.honeywell.com

Honeywell

L/FG1600SRS/D
November 2010

III.Video Surveillance System (VSS)

A.VMS Headend – Genetec Omnicast

Additional Equipment & Applications

1. AXIS Mini dome Camera

2. AXIS PTZ camera

3. AXIS 180-degree camera

4. AXIS 360-degree camera

III. Video Surveillance System (VSS)

A.VSS Headend – Genetec Ominicast

Security Center Omnicast™

Scalable video management

An intelligent view of your environment

Working smarter with video while improving your security shouldn't mean overloading your network and people. Adding more security cameras, relying on higher resolution video, and longer retention lengths put a strain on security systems. Cyber security risks and privacy concerns make it even harder.

Security Center Omnicast is a video management system that gives you the means to effectively protect your people and assets. Beyond capturing reliable and usable evidence, it lets you see and understand your environment. It's one of the core systems of Genetec Security Center, our unified security platform.

Whether you're looking after one site or overseeing operations in multiple places, Omnicast is open, flexible, and scalable. It supports the cameras of your choice and operates seamlessly over your network. Intelligent streaming and bandwidth optimization bring down networking and storage costs.

With an uninterrupted view of camera feeds and security alarms, Omnicast allows operators to rapidly assess and respond to situations. It gives them powerful search and reporting tools so they can tackle investigations faster, whether it's from their desk or on mobile devices, relieving the burden on your people and network.

Unify your video surveillance with your other security systems. By addressing multiple needs behind a single intuitive interface, you control all operations. More importantly, you can instantly react to situations.

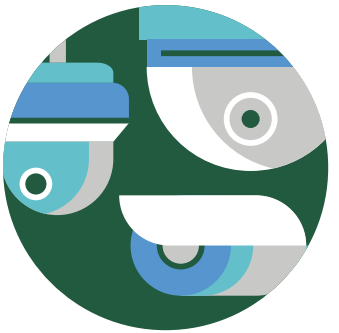

Evolves with your organization

Omnicast has a flexible and open architecture that adapts to your organization as your demands and business change. It scales to work for any organization – from very small businesses to very large enterprises – offering certainty that your video system will keep pace as conditions evolve.

A single, unified platform

When you unify your security systems with Security Center, you use just one interface for video, access control, and automatic license plate recognition (ALPR). Work smarter as you spend less time jumping between applications. Navigate facilities and oversee cameras and other devices using interactive maps. And achieve more as you tie video to SIP communications and intrusion detection.

See it all

Through Federation™, monitor multiple remote systems and sites as if they were part of a single virtual system. Access your video surveillance system from any location, at any time. Record video and share it across your organization. Control cameras, monitor alarms, and track access control and vehicle activity, to provide a common operational picture of your situation.

Grow your surveillance system and adapt to the changing demands of your team. Make the most of new technology as soon as it's available. And take advantage of flexible purchasing options: buy up-front or through subscription.

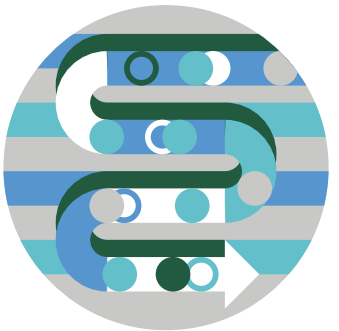

Available when you need it most

Count on live and recorded video being accessible when you need it most. Experience uninterrupted access to your video even if you lose connectivity to your server. With built-in failover and redundancy, Omnicast protects your recordings from network failure and physical damage. Health monitoring notifications give you real-time updates on system health and uptime, so you are always aware.

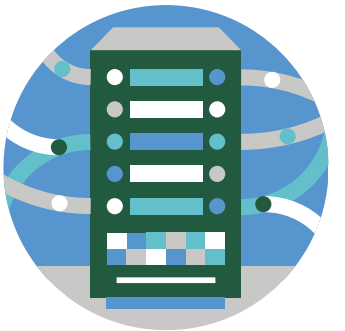

Fits with any hardware

Security Center Omnicast naturally fits with any hardware and supports thousands of industry-leading cameras, encoders, storage equipment, and sensors of your choice. So you're up and running in less time, adopt Genetec's security appliances pre-loaded with Omnicast software. Fully tested and validated, they lessen your risk over time while performing optimally.

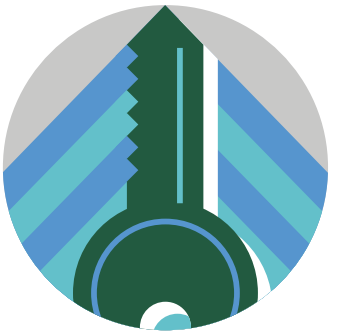

At home on your network

Omnicast eases into your network; so much so you almost won't know it's there until you need it most. Backed by 20 years' experience, our next generation video engine – with its intelligent streaming and bandwidth management – overcomes network overload encountered by less sophisticated solutions.

Quotes from our customers

Omnicast is an innovative, established, market-leading video management system. But don’t just take our word for it – here are some of our happy customers.

“The new security system is a great ally. We use it daily to monitor hall traffic and doors, as well as the parking lots and bus loop. It also helps tremendously when dealing with student discipline issues, helping us to communicate facts to parents.”

Hilton Central School District

“This system is very much designed so that the entire building can be managed by this very small team and that meant we needed an intelligent solution with proactive detection and reporting capabilities.”

Brisbane City Hall

“Unlike the old analog system where we had to connect to individual DVRs to find video, all of our cameras are right there in a pool. We can search by dates and times, and fast-forward and rewind with the click of a mouse; all of it is smooth and easy.”

Homemakers Furniture

“Genetec was extremely responsive in helping us accomplish this project, and we were able to save a lot of money through this custom application, as we didn’t have to install an entirely new system.”

Tampa International Airport

Omnicast in action

With Omnicast, organizations of all sizes gain the capacity to bolster security, simplify operational tasks, and gather intelligent data. Here's a closer look at a few of the different types of businesses that can benefit.

Omnicast customer stories

A large enterprise

This global retailer manages stores, distribution centers, and many thousands of cameras, but expansion had outpaced security investment. Their existing system couldn't keep up, lacking multi-site capabilities and access to globally distributed entities. Something as simple as replacing a faulty camera could go undetected or meant a lengthy call. Omnicast's centralized monitoring, efficient multi-site stream management, and scalability was the answer. An immediate benefit was its real-time health monitoring, which gives users a clear view of the uptime of all cameras and components to proactively address imminent problems, all over the world.

Whether it's a small coffee shop, a large office, or an international airport, Omnicast provides you with the uptick you need to protect your organization – and help it flourish.

A coffee shop

An increase in intruder incidents convinced coffee shop manager Jeff that he had to understand what was going on around the store after closing time. He also needed a smarter system than his old school DVR. Using his existing cameras with his new Omnicast system meant he would receive mobile alerts following any after-hours motion and detection of nearby vehicles. A pay-as-you-go subscription gave him a more powerful video option at an affordable price. And the footage he gave the police ensured the perpetrators were found.

An international airport

With millions of passengers traveling through each year, and an extensive perimeter to monitor, safety is paramount for any international airport. One of the main tasks for the security team is to maintain uninterrupted monitoring of the airport's estate, so they rely heavily on video surveillance. They need accurate, real-time video to secure the airport against everything from trespassers and unwanted intruders to vandals, or worse. Beyond security, Omnicast is used to make sure vehicles aren't parked illegally and to help improve the flow of airport traffic. It's this combination of security and insight into how to make the facility work better that makes Omnicast such an invaluable tool.

The unified Genetec experience

Omnicast is one of the core systems of Security Center, our comprehensive security platform. Along with access control and automatic license plate recognition (ALPR) – as well as optional Genetec modules and partner add-ons – it forms a unified system that offers enhanced intelligence, security, and operations.

Our core systems

Security Center Omnicast is a video management system that uniquely addresses your organization's video security and privacy needs. Efficiently manage and monitor HD video, and choose from an ever-growing range of industry-leading cameras.

Security Center Synergis is an access control system that lets you manage the flow of people coming into your buildings. It secures your organization, simplifies your operations, and ensures you are not locked into a proprietary solution.

Security Center AutoVu is an automatic license plate recognition system. It makes it easier for commercial and municipal organizations to enforce parking, optimize traffic flow, and identify and track vehicles of interest.

Our optional modules

Plan Manager offers interactive and graphical mapping, allowing you to visualize and manage security environments. Dynamically navigate through facilities and oversee a greater number of cameras and doors. It provides complete and real-time coverage for both small and large multi-site environments.

Sipelia Communications Management enables SIP-based communications between operators and intercom devices. When unified in Security Center, intercom communications are linked to your security applications, significantly improving your security team's awareness and facilitating collaboration.

Security Center Mobile gives you remote access to Security Center through a suite of mobile apps. View live or recorded video, control remote cameras, and review access-control events and system alarms.

Security Center Web Client allows you to take control of your security system from anywhere you can use a web browser. Monitor cameras, search for and review access control events and system alarms, export video, and manage cardholders and visitors.

Our built-in key features

Security Center Federation provides centralized monitoring, reporting, and alarm management across multiple remote sites and locations, streamlining your global security.

Global Cardholder Management lets you easily synchronize cardholders across different locations. You issue one card that accesses across multiple sites, reducing cost and effort at the same time.

Intrusion Panel Integration allows you to monitor intrusion status and alarms alongside video and access control, as well as eliminate false alarms and associated costs.

Failover offers continuous server access that can tolerate hardware failures without any system interruption.

Threat Level Management lets you quickly change the behavior of your system in response to changing security conditions.

Cloud Archives gives you the capacity to store video recordings in the cloud.

Active Directory Integration synchronizes Windows accounts with Security Center administrator and cardholder accounts, so you save valuable time and eliminate human error.

SDK Integration Tools allow you to augment Security Center by integrating new devices, capabilities, and custom functionality.

Our partner add-ons

Visualization: *video walls, dashboards, AutoCAD.*
Get an intelligent, structured view of your security environment. See the big picture with video walls that display more video, images, and data. And, with seamless integration to Security Center, overall situational awareness is enhanced.

Identification: *face recognition, biometrics, ID scanning.*
When an access card isn't enough, control entry with seamless, non-intrusive and secure biometric credentials. Identify people through facial recognition technology and use multi-factor authentication to increase security.

Protection: *intrusion, gunshot and perimeter detection, asset management.*
Make use of various sensors to improve your monitoring and decision making. Integrate video and audio analytics to automate detection and benefit from smarter forensics investigations. And augment physical security with video analytics to protect your perimeter, while ensuring personal privacy.

Efficiency: *building automation, parking systems, destination management.*
Integrate building automation and intelligent parking systems to Security Center. Manage all elevator traffic from your security platform, giving you more control and visibility of building activity.

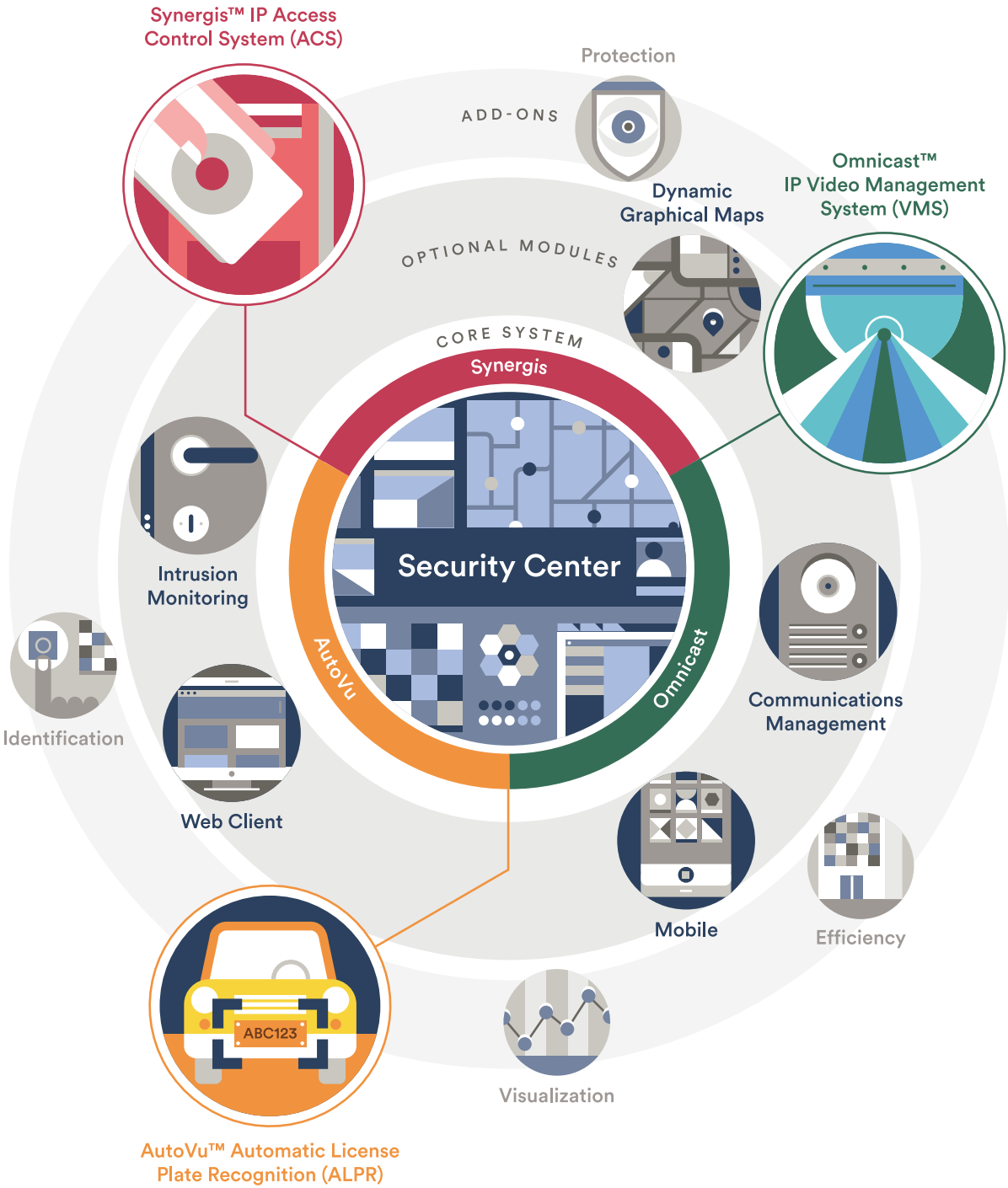
Synergis™ IP Access Control System (ACS)
Protection
ADD-ONS
Dynamic Graphical Maps
Omnicast™ IP Video Management System (VMS)
OPTIONAL MODULES
CORE SYSTEM
Synergis
Security Center
AutoVu
Omnicast
Intrusion Monitoring
Identification
Web Client
Communications Management
Mobile
Efficiency
Visualization
ABC123
AutoVu™ Automatic License Plate Recognition (ALPR)

See it all, all the time

Omnicast is a video management system that provides organizations of all sizes with the ability to deploy a surveillance system that helps them improve, understand, and protect their people, operations, assets, and environments. Supporting a wide range of industry-leading cameras, encoders, and security devices, the Omnicast system scales and adapts to the changing demands of your security environment.

Corporate Headquarters
Genetec Inc.
2280 Alfred-Nobel Blvd.,
Montréal QC H4S 2A4
Canada
Toll Free: +1 866 684 8006
Canada & USA:
Tel: +1 514 332 4000
genetec.com

Security Center Omnicast empowers organizations large and small to protect and secure their people, assets, and facilities.

III. Video Surveillance System (VSS)

1. AXIS Cameras

AXIS P3225-LV Mk II Network Camera

Streamlined HDTV 1080p fixed dome for any light conditions

AXIS P3225-LV Mk II is a streamlined fixed dome that provides HDTV 1080p video. It features a varifocal lens and remote zoom and focus, which eliminates the need for hands-on fine tuning. Equipped with WDR – Forensic Capture to handle scenes with strong variations in light, Lightfinder technology for exceptional light sensitivity, as well as built-in IR illumination with OptimizedIR, this versatile camera provides outstanding video quality in any light conditions. It supports Axis Zipstream technology that significantly reduces bandwidth and storage requirements.

- > HDTV 1080p video quality
- > Remote zoom and focus
- > Lightfinder and WDR – Forensic Capture
- > OptimizedIR illumination
- > Axis Zipstream

AXIS P3225-LV Mk II Network Camera

Camera	
Image sensor	Progressive scan RGB CMOS 1/3"
Lens	Varifocal, 3.0–10.5 mm, F1.4 Horizontal field of view: 92°–34° Vertical field of view: 50°–20° Remote focus and zoom, P-Iris control, IR corrected
Day and night	Automatically removable infrared-cut filter
Minimum illumination	**HDTV 1080p 25/30 fps with WDR - forensic capture and Lightfinder:** Color: 0.16 lux at 50 IRE, F1.4 B/W: 0.03 lux at 50 IRE, F1.4, 0 lux with IR illumination on **HDTV 1080p 50/60 fps:** Color: 0.32 lux at 50 IRE, F1.4 B/W: 0.06 lux at 50 IRE, F1.4, 0 lux with IR illumination on
Shutter time	1/66500 s to 1 s
Camera angle adjustment	Pan ±180°, tilt -35 to +75°, rotation ±95°
Video	
Video compression	H.264 Baseline, Main and High Profile (MPEG-4 Part 10/AVC) Motion JPEG
Resolution	1920x1080 to 160x90
Frame rate	**With WDR:** 25/30 fps with power line frequency 50/60 Hz **Without WDR:** 50/60 fps with power line frequency 50/60 Hz
Video streaming	Multiple, individually configurable streams in H.264 and Motion JPEG Axis Zipstream technology in H.264 Controllable frame rate and bandwidth VBR/MBR H.264
Multi-view streaming	2 individually cropped out view areas
Pan/Tilt/Zoom	Digital PTZ, preset positions
Image settings	Compression, Color, Brightness, Sharpness, Contrast, Local contrast, White balance, Exposure control (including automatic gain control), Exposure zones, Fine tuning of behavior at different light levels, WDR - forensic capture: Up to 120 dB depending on scene, Text and image overlay, Mirroring of images, Privacy masks Rotation: 0°, 90°, 180°, 270°, including Corridor Format
Network	
Security	Password protection, IP address filtering, HTTPS[a] encryption, IEEE 802.1X[a] network access control, Digest authentication, User access log, Centralized Certificate Management, brute force delay protection
Supported protocols	IPv4, IPv6 USGv6, HTTP, HTTPS[a], SSL/TLS[a], QoS Layer 3 DiffServ, FTP, CIFS/SMB, SMTP, Bonjour, UPnP™, SNMP v1/v2c/v3(MIB-II), DNS, DynDNS, NTP, RTSP, RTP, SRTP, SFTP, TCP, UDP, IGMP, RTCP, ICMP, DHCP, ARP, SOCKS, SSH, LLDP
System integration	
Application Programming Interface	Open API for software integration, including VAPIX® and AXIS Camera Application Platform; specifications at *www.axis.com* AXIS Video Hosting System (AVHS) with One-Click Connection ONVIF® Profile G, ONVIF® Profile S, and ONVIF® Profile T, specification at *onvif.org*
Analytics	**Included** AXIS Video Motion Detection, active tampering alarm **Supported** AXIS Motion Guard, AXIS Fence Guard, AXIS Loitering Guard, AXIS Perimeter Defender AXIS Digital Autotracking, AXIS People Counter, AXIS Tailgating Detector, AXIS Direction Detector, AXIS Occupancy Estimator, AXIS Random Inspection, AXIS Queue Monitor Support for AXIS Camera Application Platform enabling installation of third-party applications, see *www.axis.com/acap*
Event triggers	Analytics, edge storage events, virtual inputs through API
Event actions	Record video: SD card and network share Upload of images or video clips: FTP, SFTP, HTTP, HTTPS, network share and email Pre- and post-alarm video or image buffering for recording or upload Notification: email, HTTP, HTTPS, TCP and SNMP trap Overlay text
Data streaming	Event data
Built-in installation aids	Remote zoom, remote focus, pixel counter, optimized IR with adjustable IR illumination intensity
General	
Casing	IP52-rated, IK08 impact-resistant, polycarbonate casing with hard-coated dome and dehumidifying membrane Encapsulated electronics and captive screws Color: white NCS S 1002-B For repainting instructions of skin cover or casing and impact on warranty, contact your Axis partner.
Mounting	Mounting bracket with holes for junction boxes (double-gang, single-gang, and 4" octagon) and for wall or ceiling mount ¼"-20 UNC tripod screw thread
Sustainability	PVC free
Memory	512 MB RAM, 256 MB Flash
Power	Power over Ethernet IEEE 802.3af/802.3at Type 1 Class 3, max 10.2 W, typical 6.1 W
Connectors	Shielded RJ45 10BASE-T/100BASE-TX PoE
IR illumination	Optimized IR with power-efficient, long-life 850 nm IR LEDs with adjustable illumination intensity. Range of reach 30 m (100 ft) or more depending on scene
Storage	Support for microSD/microSDHC/microSDXC card Support for SD card encryption Support for recording to network-attached storage (NAS) For SD card and NAS recommendations see *www.axis.com*
Operating conditions	0 °C to 50 °C (32 °F to 122 °F) Humidity 10 to 85% RH (non-condensing)
Storage conditions	-40 °C to 65 °C (-40 °F to 149 °F)
Approvals	**EMC** EN 55022 Class B, EN 61000-6-1, EN 61000-6-2, EN 55024, EN 50121-4, IEC 62236-4, FCC Part 15 Subpart B Class A and B, ICES-003 Class B, VCCI Class B, RCM AS/NZS CISPR 22 Class B, KCC KN22 Class B, KN24 **Safety** IEC/EN/UL 60950-1, IEC/EN 62471 **Environment** IEC 60068-2-1, IEC 60068-2-2, IEC 60068-2-14 IEC 60068-2-6 (vibration), IEC 60068-2-27 (shock), IEC 60068-2-78, IEC/EN 60529 IP52, IEC/EN 62262 IK08 **Network** NIST SP500-267
Dimensions	Height: 101 mm (4 in) ø 149 mm (5 7/8 in)
Weight	550 g (1.2 lb)
Included accessories	Installation Guide, Windows decoder 1-user license, mounting bracket, cable gasket, Resistorx® T20 L-key, drill template, connector guard
Optional accessories	AXIS ACI Conduit Bracket B, AXIS ACI Conduit Adapters, AXIS T94K01L Recessed Mount Kit, AXIS T94K01D Pendant Kit, AXIS Skin Cover C, Black, AXIS Mounts, Smoked dome For more accessories, see *www.axis.com*
Video management software	AXIS Companion, AXIS Camera Station, Video management software from Axis' Application Development Partners available on *www.axis.com/vms*
Languages	English, German, French, Spanish, Italian, Russian, Simplified Chinese, Japanese, Korean, Portuguese, Traditional Chinese
Warranty	Axis 3-year warranty and AXIS Extended Warranty option, see *www.axis.com/warranty*

a. *This product includes software developed by the OpenSSL Project for use in the OpenSSL Toolkit. (www.openssl.org), and cryptographic software written by Eric Young (eay@cryptsoft.com).*

Environmental responsibility:

AXIS Q6054 Mk III

Indoor PTZ with 30x zoom and focus recall and Lightfinder

AXIS Q6054 Mk III is a top-of-the-line, indoor PTZ camera, offering fast and precise pan/tilt performance for wide area coverage and detailed surveillance at great distances. The focus recall feature offers instant focus in predefined areas. The camera comes with Axis Lightfinder technology to ensure color images even in low-light conditions. Axis Zipstream technology reduces bandwidth and storage requirements. AXIS Q6054 Mk III offers shock detection, video motion detection, Active Gatekeeper, and electronic image stabilization that gives smoother video in environments with vibrations. It supports two-way audio, audio detection, I/O ports, and 24 V AC/DC power.

> Lightfinder

> HDTV 720p and 30x optical zoom

> Focus recall

> Zipstream

> IP52-rated protection against dust and dripping water

AXIS Q6054 Mk III

Models	AXIS Q6054 Mk III 60 Hz AXIS Q6054 Mk III 50 Hz
Camera	
Image sensor	1/2.8" progressive scan RGB CMOS
Lens	4.3-129 mm, F1.6-4.7 Horizontal field of view: 63.6°–2.5° (720p), 49.7°–1.73° (D1) Vertical field of view: 38.1°–1.45° (720p), 38.1°–1.3° (D1) Autofocus, auto-iris
Day and night	Automatically removable infrared-cut filter
Minimum illumination	**Color:** 0.1 lux at 30 IRE F1.6 **B/W:** 0.008 lux at 30 IRE F1.6 **Color:** 0.15 lux at 50 IRE F1.6 **B/W:** 0.01 lux at 50 IRE F1.6
Shutter time	1/30000 s to 1/0.75 s with 50 Hz 1/30000 s to 1 s with 60 Hz
Pan/Tilt/Zoom	Pan: 360° endless, 0.05°–450°/s Tilt: 180°, 0.05°–450°/s 30x optical zoom and 12x digital zoom, total 360x zoom E-flip, 256 preset positions, tour recording (max 10, max duration 16 minutes each), guard tour (max 100), control queue, on-screen directional indicator, adjustable zoom speed
Video	
Video compression	H.264 (MPEG-4 Part 10/AVC) Baseline, Main and High Profiles Motion JPEG
Resolution	HDTV 720p 1280x720 to 320x180 D1 720x576 (50 Hz) (as Capture Mode) D1 720x480 (60 Hz) (as Capture Mode)
Frame rate	Up to 50/60 fps (50/60 Hz) in all resolutions
Video streaming	Multiple, individually configurable streams in H.264 and Motion JPEG Axis Zipstream technology in H.264 Controllable frame rate and bandwidth VBR/MBR H.264
Image settings	Manual shutter time, compression, color, brightness, sharpness, white balance, exposure control, exposure zones, fine tuning of behavior at low light, rotation: 0°, 180°, text and image overlay, 32 individual 3D privacy masks, image freeze on PTZ, defogging, backlight compensation, scene profiles, focus recall Electronic Image Stabilization (EIS) Wide Dynamic Range (WDR): Up to 120 dB depending on scene
Audio	
Audio streaming	Two-way: full-duplex, half-duplex, simplex
Audio compression	AAC-LC 8/16 kHz, G.711 PCM 8 kHz, G.726 ADPCM 8 kHz, Opus 8/16/48 kHz Configurable bit rate
Audio input/output	Requires multicable (sold separately) for external microphone or line input, and line output
Network	
Security	Password protection, IP address filtering, HTTPS[a] encryption, IEEE 802.1X[a] network access control, Digest authentication, User access log, Centralized Certificate Management, Brute force delay protection
Supported protocols	IPv4, IPv6 USGv6, HTTP, HTTPS[a], SSL/TLS[a], QoS Layer 3 DiffServ, FTP, CIFS/SMB, SMTP, Bonjour, UPnP™, SNMP v1/v2c/v3 (MIB-II), DNS, DynDNS, NTP, RTSP, RTP, SRTP, SFTP, TCP, UDP, IGMP, RTCP, ICMP, DHCP, ARP, SOCKS, SSH, NTCIP
System integration	
Application Programming Interface	Open API for software integration, including VAPIX® and AXIS Camera Application Platform; specifications at *www.axis.com* AXIS Video Hosting System (AVHS) with One-Click Connection ONVIF® Profile S and ONVIF® Profile G, specification at *www.onvif.org*
Analytics	**Included** AXIS Video Motion Detection, audio detection, AXIS Fence Guard, AXIS Motion Guard **Supported** Support for AXIS Camera Application Platform enabling installation of third-party applications, see *www.axis.com/acap*
Event triggers	Detectors: live stream accessed, video motion detection, shock detection, audio detection Hardware: fan, network, temperature PTZ: autotracking, error, moving, preset reached, ready Storage: disruption, recording System: system ready Time: recurrence, use schedule Input signal: manual trigger, virtual input, digital input
Event actions	Day/night mode, overlay text, video recording to edge storage, pre- and post-alarm video buffering, send SNMP trap PTZ: PTZ preset, start/stop guard tour File upload via FTP, SFTP, HTTP, HTTPS network share and email Notification via email, HTTP, HTTPS and TCP External output activation, audio recording to edge storage, play audio clip
Data streaming	Event data
Built-in installation aids	Pixel counter
General	
Casing	IP52-rated Metal casing (aluminum), Acrylic (PMMA) clear dome
Sustainability	PVC free
Memory	512 MB RAM, 256 MB Flash
Power	**Axis PoE+ midspan 1–port:** 100–240 V AC, max 37 W IEEE 802.3at Type 2 Class 4 Camera consumption: typical 13 W, max 19 W **Multiconnector:** 20–28 V DC, typical 11 W, max 16 W 20–24 V AC, typical 17 VA, max 22 VA
Connectors	RJ45 10BASE-T/100BASE-TX PoE, multiconnector (cable sold separately) for AC/DC power, 4 configurable alarm inputs/outputs, mic in, line mono input, line mono output to active speaker
Storage	Support for SD/SDHC/SDXC card Support for SD card encryption Support for recording to network-attached storage (NAS) For SD card and NAS recommendations see *www.axis.com*
Operating conditions	0 °C to 50 °C (32 °F to 122 °F) Humidity 10–85% RH (non-condensing)
Storage conditions	-40 °C to 65 °C (-40 °F to 149 °F)
Approvals	**EMC** EN 55032 Class A, EN 61000-3-2, EN 61000-3-3, EN 61000-6-1, EN 61000-6-2, EN 55024, FCC Part 15 Subpart B Class A, ICES-003 Class A, VCCI Class A, RCM AS/NZS CISPR 32 Class A, KCC KN32 Class A, KN35 **Safety** IEC/EN/UL 60950-1 **Environment** IEC/EN 60529 IP52, IEC 60721-4-3, IEC 60068-2 **Network** NIST SP500-267 **Midspan:** EN 60950-1, GS, UL, cUL, CE, FCC, VCCI, CB, KCC, UL-AR
Weight	Camera: 2.6 kg (5.7 lb); with drop-ceiling mount: 3.2 kg (7.1 lb)
Dimensions	Hard-ceiling: Ø198 x 240 mm (Ø7 13/16 x 9 7/16 in) Drop-ceiling: Ø248 x 243 mm (Ø9 3/4 x 9 9/16 in)
Included accessories	Axis PoE+ midspan 1-port, Recessed mount for hard and drop ceilings, Smoked dome cover Installation Guide, Windows decoder 1-user license
Optional accessories	AXIS P55/Q60 Multi-connector cable, 5 m AXIS T91 Mounting Accessories, AXIS T8415 Wireless Installation Tool, AXIS T90 Illuminators, AXIS T8310 Video Surveillance Control Board, multi-user decoder license pack
Video management software	AXIS Companion, AXIS Camera Station, Video management software from Axis' Application Development Partners available on *www.axis.com/vms*

SINGLE SENSOR 180/360 DEGREE CAMERA

AXIS M3057-PLVE

6 MP outdoor-ready dome with 360° panoramic view and IR illumination

AXIS M3057-PLVE Network Camera delivers outstanding video in any light conditions, using Axis-developed Forensic WDR and Lightfinder technologies. With its integrated, automatically adaptable OptimizedIR illumination, this versatile camera even sees in the dark. The camera offers 360° overview as well as dewarped views. AXIS M3057-PLVE is vandal resistant (IK10) and discreetly designed. The optional black skin, which is also easily repaintable, can be used to further blend the camera into its environment. The camera has good capacity for analytics. It comes factory-focused and is designed for easy installation.

- > 6 MP sensor
- > OptimizedIR illumination
- > Lightfinder technology
- > Forensic WDR
- > Zipstream for reduced bandwidth and storage

2048 x 2048
3072 x 2048

DVS

AXIS M3057-PLVE

Camera	
Image sensor	6 MP (3072x2048) 1/1.8" progressive scan RGB CMOS
Lens	Fixed iris, fixed focus, 1.6 mm, F2.0 Horizontal field of view: 185° Vertical field of view: 185°
Day and night	Automatically removable infrared-cut filter
Minimum illumination	**Color:** 0.16 lux at 50 IRE F2.0 **B/W:** 0.03 lux at 50 IRE F2.0 0 lux with IR illumination on
Shutter time	1/100 000 s to 2 s
Camera angle adjustment	Rotation n ±180°
Video	
Video compression	H.264 (MPEG-4 Part 10/AVC) Baseline, Main and High Profiles Motion JPEG
Resolution	Overview: 2048x2048 to 160x160 Panorama: 2560x960 to 192x72 Double panorama: 2560x1920 to 256x144 Quad view: 2560x1920 to 256x144 View area 1-4, **16:9**: 1920x1080 to 256x144, **4:3**: 1920x1440 to 320x240 Panorama corner left/right: 2368x1184 to 192x72 Double panorama corner: 2048x2048 to 320x240 Corridor: 2560x1920 to 256x144
Frame rate	360° overview only, up to 2048x2048 without WDR: 50/60 fps @ 50/60 Hz 360° overview and dewarped views up to max resolution with WDR: up to 25/30 fps @ 50/60 Hz
Video streaming	Multiple, individually configurable streams in H.264 and Motion JPEG Axis Zipstream technology in H.264 Controllable frame rate and bandwidth VBR/MBR H.264
Multi-view streaming	360° overview, dewarped panorama, double panorama, corridor and quad views. Up to 4 individually cropped out and dewarped view areas. All different views can be streamed simultaneously. When streaming 4 dewarped view areas and one 360° overview in max resolution: up to 14 fps per stream
HDMI output	HDMI 1080p @ 50/60 fps (50/60 Hz)
Image settings	Compression, color, brightness, sharpness, contrast, local contrast, white balance, exposure control (including automatic gain control) exposure zones, fine tuning of behavior at different light levels, forensic WDR: up to 120 dB depending on scene, dynamic text and image overlay, privacy masks, mirroring of images, rotation: 0°, 180°, including Corridor Format
Pan/Tilt/Zoom	Digital PTZ of view areas, digital PT of panorama, corner, corridor and quad views, preset positions, guard tour
Network	
Security	Password protection, IP address filtering, HTTPS[a] encryption, IEEE 802.1X[a] network access control, digest authentication, user access log, centralized certificate management, brute force delay protection
Supported protocols	IPv4, IPv6 USGv6, HTTP, HTTPS[a], SSL/TLS[a], QoS Layer 3 DiffServ, FTP, SFTP, CIFS/SMB, SMTP, Bonjour, UPnP®, SNMP v1/v2c/v3 (MIB-II), DNS, DynDNS, NTP, RTSP, RTP, SRTP, TCP, UDP, IGMP, RTCP, ICMP, DHCP, ARP, SOCKS, SSH, LLDP, HDMI 1.4b
System integration	
Application Programming Interface	Open API for software integration, including VAPIX® and AXIS Camera Application Platform; specifications at *axis.com* AXIS Video Hosting System (AVHS) with One-Click Connection ONVIF® Profile G, ONVIF® Profile S, and ONVIF® Profile T, specification at *onvif.org*
Analytics	**Included** AXIS Video Motion Detection, active tampering alarm **Supported** AXIS Motion Guard, AXIS Fence Guard, and AXIS Loitering Guard Support for AXIS Camera Application Platform enabling installation of third-party applications, see *axis.com/acap*
Event triggers	Analytics, supervised external input, virtual inputs through API, edge storage events, open casing
Event actions	Record video: SD card and network share Upload of images or video clips: FTP, SFTP, HTTP, HTTPS, network share and email Pre- and post-alarm video or image buffering for recording or upload Notification: email, HTTP, HTTPS, TCP and SNMP trap PTZ: PTZ preset, start/stop guard tour Overlay text, external output activation
Data streaming	Event data
Built-in installation aids	Pixel counter, digital PTZ of view areas, digital PT of panorama, corner, corridor and quad views
General	
Casing	IP66- and NEMA 4X-rated, IK10 impact-resistant casing in polycarbonate and aluminium, with hard-coated dome and dehumidifying membrane Encapsulated electronics and captive screws Color: White NCS S 1002-B For repainting, use the optional skin cover. Contact your Axis partner for instructions.
Sustainability	PVC-free
Memory	2 GB RAM, 512 MB Flash
Power	Power over Ethernet (PoE) IEEE 802.3af/802.3at Type 1 Class 3 Typical 7.7 W, max 12.95 W
Connectors	RJ45 10BASE-T/100BASE-TX PoE Terminal block for 1 supervised alarm input and 1 digital output (12 V DC output, max. load 25 mA) HDMI type D[b]
IR illumination	OptimizedIR with with power-efficient, long-life 850 nm IR LEDs with adaptable illumination intensity Range of reach 20 m (66 ft) or more depending on scene
Storage	Support for microSD/microSDHC card Support for SD card encryption Support for recording to network-attached storage (NAS) For SD card and NAS recommendations see *axis.com*
Operating conditions	-40 °C to 50 °C (-40 °F to 122 °F) Maximum temperature (intermittent): 55 °C (131 °F) Start-up: -30 °C to 50 °C (-22 °F to 122 °F) Humidity 10–100% RH (condensing)
Storage conditions	-40 °C to 65 °C (-40 °F to 149 °F)
Approvals	**EMC** EN 55032 Class A, EN 50121-4, IEC 62236-4, EN 55024, EN 61000-6-1, EN 61000-6-2, FCC Part 15 Subpart B Class A, ICES-003 Class A, VCCI Class A, RCM AS/NZS CISPR 32 Class A, KC KN32 Class A, KC KN35 **Safety** IEC/EN/UL 62368-1, IEC/EN/UL 60950-22, IEC/EN 62471 **Environment** IEC 60068-2-1, IEC 60068-2-2, IEC 60068-2-6, IEC 60068-2-14, IEC 60068-2-27, IEC 60721-3-5 Class 5M3 (vibration and shock), IEC/EN 60529 IP66, IEC/EN 62262 IK10, NEMA 250 Type 4X **Network** NIST SP500-267
Dimensions	Height: 66 mm (2 5/8 in) ø 149 mm (5 7/8 in)
Weight	770 g (1.7 lb)
Included accessories	Installation guide, Windows® decoder 1-user license, drill hole template, cable gaskets, connector guard, I/O connector, Resistorx® T20 L-key, mounting bracket, cable hole lid, view protector
Optional accessories	AXIS T94T02D Pendant Kit with weathershield, AXIS T94K01D Pendant Kit, AXIS T94S02L Recessed Mount Kit, AXIS M30 Skin Cover A Black, Axis Mounts & Cabinets For more accessories, see *axis.com*

III. Video Surveillance System (VSS)

5. ARECONT VISION SurroundVideo G5 Mini 180/360 Degree IP Camera

MegaIP™

Arecont Vision®
A COSTAR COMPANY

SurroundVideo® G5 Mini IP Megapixel Cameras

12 or 20 Megapixel (MP) H.264 All-in-One 180° or 360° Panoramic True Day/Night Indoor/Outdoor Dome IP Cameras with SNAPstream™ (Smart Noise Adaptation and Processing) and Enhanced WDR™ (Wide Dynamic Range) Models

180° Panoramic

360° Panoramic

The SurroundVideo® G5 Mini is an all-in-one total PoE panoramic IP camera solution available in 12-megapixel (12MP) or 20MP resolutions for both 180°-view or 360°-view configurations. A SurroundVideo camera can replace multiple fixed or PTZ cameras by recording the entire panoramic field of view with the ability to zoom into multiple regions of interest for a return on investment that's easily measured.

Featuring an installer-friendly dome housing and a size roughly 50% smaller than previous SurroundVideo models, the SurroundVideo G5 Mini delivers excellent versatility for installation. Additionally, the SurroundVideo G5 Mini has improved performance with faster frame rates than ever before.

Regardless of time-of-day, this camera is ideal for applications with challenging lighting conditions. The series combines a day/night mechanical IR cut filter for the highest image quality at any time of day. For applications with bright or over saturated lighting conditions, optional Enhanced WDR™ wide dynamic range delivers up to 100dB at full resolution and is available on select 12MP models. For applications with poor low lighting conditions, Binning Mode increases the camera's low light performance by combining pixels so that more light can be collected.

SurroundVideo G5 Mini is designed for demanding environments. Subjected and certified to rigorous dust and water tests, the IP66 rating, and its extended operating temperature range make it ideal for outdoor applications. The IK-10 rated, rugged dome housing is perfect for deterring vandals since it can withstand the equivalent of 55 kg (120 lbs) of force.

SurroundVideo G5 Mini models feature SNAPstream™ (Smart Noise Adaptation and Processing) technology to reduce bandwidth without impacting image quality. The camera offers advanced streaming capabilities and is designed on an efficient H.264 encoding platform capable of delivering high quality video without straining the network. Power can be supplied via a single Power-over-Ethernet compliant network cable or with power from a 18–48V DC/24V AC power supply.

The camera's interface allows for an intuitive, fast, and easy configuration; while the free AV IP Utility™ tool allows users to quickly configure multiple cameras at one time. SurroundVideo G5 Mini is ONVIF Profile S (Open Network Video Interface Forum) compliant, providing interoperability between network video products regardless of manufacturer.

180° Panoramic | 360° Panoramic | SNAPstream™ Technology | Enhanced WDR™ Wide Dynamic Range on Select 12MP Models | True Day/Night with IR Cut Filter | Pixel Binning Mode | Installer Friendly | Impact / Weather Resistant IK-10 and IP66 Rated | All-in-One PoE and Integrated Lenses | Dual Encoder H.264/MJPEG

Series Features

- 12MP and 20MP Models
- Forensic Zooming – Zoom Live or After the Event While Recording Full Field-of-View in HD – Replace PTZ Devices
- SNAPstream™ Capability to Reduce Bandwidth without Impacting Image Quality
- Enhanced WDR™ up to 100dB at Full Resolution: See Clearly in Shaded and Bright Light Conditions Simultaneously on Select 12MP Models
- True Day/Night Functionality with Electromechanical IR Cut Filter
- Binning Mode for Strong Low Light Performance
- Privacy Mask, Motion Detection, Flexible Cropping, Bit Rate Control, Multi-Streaming, and Multicasting
- Dual Encoder H.264/MJPEG
- Network Protocols Include 802.1x, IPv4, DHCP, and More
- PoE and Auxiliary Power: 18–48V DC/24V AC
- Easily Adjustable 2-Axis Camera Gimbal with 360° Pan and 90° Tilt
- +/- 5° Electrical Vertical Alignment to Locate Each Sensor Position (180° Series)
- +/- 7° Mechanical Tilt Adjustment to Locate Each Sensor Angle (360° Series)
- Outdoor Rated IP66 and IK-10 Impact-Resistant Housing

Camera Imaging Specifications

Model		AV12585DN	AV12565DN	AV12586DN	AV12566DN	AV20585DN	AV20565DN
Image Sensor (CMOS)		12MP (4 x 3MP)	12MP (4 x 3MP)	12MP (4 x 3MP)	12MP (4 x 3MP)	20MP (4 x 5MP)	20MP (4 x 5MP)
H-FOV		180°	360°	180°	360°	180°	360°
Optical Format		1/3" Progressive Scan	1/3" Progressive Scan	1/3.2" Progressive Scan	1/3.2" Progressive Scan	1/2.5" CMOS	1/2.5" CMOS
Pixel Pitch		2.2µm	2.2µm	2.2µm	2.2µm	2.2µm	2.2µm
Minimum Illumination	Color (Day Mode)	0.2 Lux	0.2 Lux	0.2 Lux	0.1 Lux	0.3 Lux	0.3 Lux
	Color Binning (Day Mode)	0.1 Lux	0.1 Lux	0.1 Lux	0.1 Lux	0.15 Lux	0.15 Lux
	B/W (Night Mode)	0.02 Lux	0.02 Lux	0.02 Lux	0.02 Lux	0.03 Lux	0.03 Lux
Full FOV Resolution	Total	8192 H x 1536 V	8192 H x 1536 V	8192 H x 1536 V	8192 H x 1536 V	10240 H x 1920 V	10240 H x 1920 V
	Per Sensor	2048 H x 1536 V	2048 H x 1536 V	2048 H x 1536 V	2048 H x 1536 V	2560 H x 1920 V	2560 H x 1920 V
1/4 Resolution	Total	4096 H x 768 V	4096 H x 768 V	4096 H x 768 V	4096 H x 768 V	5120 H x 960 V	5120 H x 960 V
	Per Sensor	1024 H x 768 V	1024 H x 768 V	1024 H x 768 V	1024 H x 768 V	1280 H x 960 V	1280 H x 960 V
Dynamic Range		69.5dB	69.5dB	Up to 100dB at Full Resolution	Up to 100dB at Full Resolution	70.1dB	70.1dB
Frame Rates*	Full Resolution	10fps (8192 x 1536)	10fps (8192 x 1536)	10fps (8192 x 1536)	10fps (8192 x 1536)	7fps (10240 x 1920)	7fps (10240 x 1920)
	1/4 Resolution	14fps (4096 x 768)	14fps (4096 x 768)	14fps (4096 x 768)	14fps (4096 x 768)	10fps (5120 x 960)	10fps (5120 x 960)
	Binning Mode	29fps (5120 x 960)	29fps (5120 x 960)	14fps (5120 x 960)	14fps (5120 x 960)	24fps (5120 x 960)	24fps (5120 x 960)
Lens (x4)		5.4mm, M12, F2.0, 1/3.2"	2.6mm, M12, F2.0, 1/2.5"	5.4mm, M12, F2.0, 1/3.2"	2.6mm, M12, F2.0, 1/2.5"	6.7mm, M12, F2.0, 1/2.5"	3.6mm, M12, F1.8, 1/2.5"

Programmability

Low Light Performance	Pixel Binning Mode
Programmable Shutter Speed	Controls motion blur
	1ms–500ms
Motion Detection	Real-time, privacy mask, 1024 detection zones per sensor
MoonLight™ Mode	Extended exposure and proprietary noise cancellation
Flexible Cropping	Resolution windowing down to 1x1 pixel for JPEG and 2x2 pixels for H.264
Backlight Compensation	Auto multi-matrix white balance
Flicker Control	5Hz–255Hz adjustable
Image Alignment	+/-5° digital vertical alignment to adjust images (180° models)
Wide Dynamic Range	Auto switch control adjustment between WDR and LDR modes (WDR models)
Efficiency	SNAPstream™ (Smart Noise Adaptation and Processing)
	Bit rate and bandwidth limitation control
	Bandwidth and storage savings by running at 1/4 resolution
Sharpness	Selectable enhancement level
Miscellaneous	Programmable resolution, brightness, saturation, gamma, tint
	Electronic pan, tilt, zoom (PTZ)
	Simultaneous delivery of full field-of-view and zoomed images

Data Transmission

Compression Type	H.264 (MPEG-4, Part 10)/Motion JPEG
	21 levels of quality
Network Protocols	HTTP, IPv4, 802.1x, RTSP, RTP/TCP, RTP/UDP, TFTP, DHCP
Network Interface	100Base-T Ethernet
Multi-Streaming	8 non-identical streams (2 per sensor)

* Maximum with H.264 compression

Compliance

Industry Standard	ONVIF Profile S conformant
Listings	UL (CB)
FCC Compliance	47 CFR 15 Class A
Environmental	RoHS, REACH, WEEE
Markings	(CE) EN55022 Class A, EN55024, EN61000-3-2, EN61000-3-3, EN60950-1
Mechanical	IP66 (EN60529)
CoO	Made in the USA

Environmental

Protection Ratings	IP66 water/dust protection rating
	IK-10 impact-resistant polycarbonate dome
Operating Temperature	-40°C (-40°F) to +50°C (122°F)
Humidity	0% to 90% (non-condensing)
Storage Temperature	-40°C (-40°F) to +60°C (140°F)

Electrical

Alarm Input/Output	General purpose opto-coupled, 1 input / 1 output
Power Over Ethernet	PoE 802.3af, Class 3
Auxiliary Power	18–48V DC and 24V AC
Power Consumption	12.1W max DC power

Mechanical

Casing	Die-cast aluminum cover and 4" (102mm) polycarbonate dome bubble	
	IP66 weather proof standard	
	Impact resistant, IK-10 rated	
Gimbal	Easily adjustable, 2-axis w/360° pan and 90° tilt	
Dimensions *(See Dimensions on Page 3)*	**Unit**	Ø 5.77" (146.7mm) x 5" H (128mm)
	Bubble Only	Ø 4.0" (102mm) x 2.4" H (62mm)
	Packaged	6.7" W (170mm) x 6.7" L (170mm) x 5.7" H (145mm)
Weight	**Unit**	3.0lbs (1.36kg)
	Packaged	3.6lbs (1.63kg)

SurroundVideo® G5 Mini IP Megapixel Cameras

Ordering Information

Model Numbers

12MP	AV12585DN	AV12565DN
	AV12586DN WDR	AV12566DN WDR
20MP	AV20585DN	AV20565DN

Accessories (Sold Separately)

AV-CRMA	Corner Mount Adapter
AV-FMA	Flush Mount for MegaDome® Series and SurroundVideo® G5 Mini
AV-JBA**	Standard Junction Box
AV-PMA	Pole Mount Adapter
AV-PMJB	Pendant Mount Bracket with Standard Junction Box *(Fits Cap 1.5" NPT, Box Fits 3/4" NPT)*
AV-WMJB	Wall Mount Bracket with Standard Junction Box *(Fits Cap 1.5" NPT, Box Fits 3/4" NPT)*
MD-CAP	Mounting Cap for MegaDome Series and SurroundVideo G5 Mini

** Replacement part for AV-PMJB and AV-WMJB

Model Specific Features

Model	Resolution	Configuration	Frame Rate*	Features	
AV12585DN	12MP	180° Panoramic	10fps	-	Binning
AV12565DN	12MP	360° Panoramic	10fps	-	Binning
AV12586DN	12MP	180° Panoramic	10fps	WDR	Binning
AV12566DN	12MP	360° Panoramic	10fps	WDR	Binning
AV20585DN	20MP	180° Panoramic	7fps	-	Binning
AV20565DN	20MP	360° Panoramic	7fps	-	Binning

* Maximum with H.264 compression

Dimensions

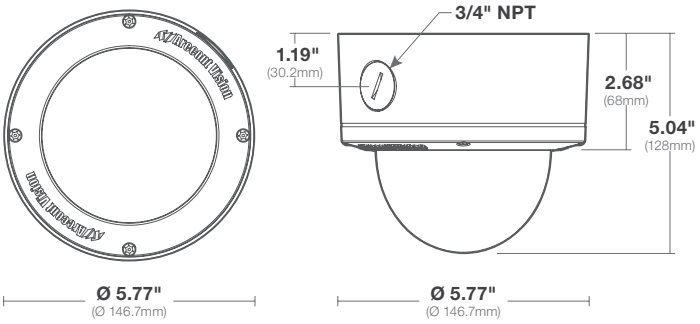

Configurations

180° Panoramic

360° Panoramic

Create Your Model (Example: AV12586DN)

	Megapixel Resolution		Generation	Body Type		Compression		True Day/Night
AV	12	20	5	8	6	5	6	DN
				180° Panoramic	360° Panoramic	H.264	H.264 + WDR[1]	True Day/Night

[1] WDR for AV12566 and AV12586 models only

Arecont Vision®
A COSTAR COMPANY

425 E. Colorado St. 7th Floor | Glendale, CA USA 91205 | +1.818.937.0700 | www.arecontvision.com | avsales@arecontvision.com

Made in the USA

Rev 002.003

AXIS P1445-LE-3 License Plate Verifier Kit

Easy, cost-effective kit for vehicle access

AXIS P1445-LE-3 License Plate Verifier Kit consists of AXIS P1445-LE Network Camera and pre-installed AXIS License Plate Verifier analytics, making it an easy, cost-effective kit for automated vehicle entry and exit management. With edge storage and I/O ports, AXIS P1445-LE-3 uses white and black lists to accurately verify access to controlled areas such as parking lots. Furthermore, built-in support for AXIS A1001 Network Door Controller makes it possible to expand the system and an open API allows for integration with third-party software. AXIS P1445-LE-3 features OptimizedIR, impact resistance and a wide temperature range for installation in any environment.

- > Cost-effective standalone system
- > Single lane detection up to 30 km/h (19 mph)
- > White and black lists for license plate verification
- > Day and night with OptimizedIR
- > Built-in support for Axis door controller and Axis I/O relay modules

AXIS License Plate Verifier

Application	
Supported devices	For a complete list of recommended and supported products, go to the product page at *axis.com*
Licenses	AXIS License Plate Verifier license included.
Configuration	Web configuration included
Settings	Define region of interest in scene. White and black list logic. Barrier mode: Open to all, open to whitelisted, open to all but blacklisted. Minimum width: 130 pixels for one-row license plates; 70 pixels for two-row license plates. FIFO event log entries including thumbnail image of license plate. Up to 1000 entries on camera storage. Up to 100 000 entries on AXIS Surveillance Cards. Configurable retention time of stored events
Detection range	2.0 to 7.0 m (6.6 to 23 ft)
Vehicle speed	Up to 30 km/h (19 mph)
Detection time	Less than 1 second.
Scenarios	
Typical applications	**Vehicle entry and exit** Entrances and exits of parking areas with known vehicles. The application verifies detected license plates against a whitelist or a blacklist for granting or denying access to an area. Maximum 1000 license plates in each list. **Vehicle access control** For a scenario where greater functionality and flexibility are required, use AXIS A1001 Network Door Controller. AXIS A1001 with AXIS Entry Manager software supports access rules including schedules, more detailed event log, and up to 400 credentials (license plates and access cards). Multiple partner software that support a greater number of credentials and features are available

System integration	
Application Programming Interface	Open API for software integration; specifications available upon request.
Event streaming	Integrates with camera event management system to enable event streaming to management software and camera actions such as I/O control, notification, and edge storage.
Supported devices	Direct integration with AXIS A1001 Network Door Controller and AXIS A91 Network I/O Relay Modules.
General	
Languages	English

AXIS P1445-LE

Camera	
Image sensor	1/2.8" progressive scan RGB CMOS
Lens	Varifocal, Remote focus and zoom, P-Iris control, IR corrected
Day and night	Automatically removable infrared-cut filter
Video	
Video compression	H.264 (MPEG-4 Part 10/AVC) Baseline, Main and High Profiles Motion JPEG
Resolution	1920x1080 to 160x90
Frame rate	**HDTV 1080p (1920x1080) with WDR:** Up to 25/30 FPS (50/60 HZ) in all resolutions **HDTV 1080p (1920x1080) without WDR:** Up to 50/60 FPS (50/60 HZ) in all resolutions
Video streaming	Multiple, individually configurable streams in H.264 and Motion JPEG Axis Zipstream technology in H.264 Controllable frame rate and bandwidth VBR/ABR/MBR H.264
Image settings	Saturation, contrast, brightness, sharpness, Forensic WDR: Up to 120 dB depending on scene, white balance, day/night threshold, exposure mode, exposure zones, compression, orientation: auto, 0°, 90°, 180°, 270° including Corridor Format, mirroring of images, dynamic text and image overlay, privacy masks
Audio	
Audio streaming	Audio in, simplex
Audio compression	24bit LPCM, AAC-LC 8/16/32/48 kHz, G.711 PCM 8 kHz, G.726 ADPCM 8 kHz, Opus 8/16/48 kHz Configurable bit rate
Audio input/output	External microphone input or line input
Network	
Security	Password protection, IP address filtering, HTTPS[a] encryption, IEEE 802.1X (EAP-TLS)[a] network access control, digest authentication, user access log, centralized certificate management, brute force delay protection, signed firmware
Supported protocols	IPv4, IPv6 USGv6, HTTP, HTTPS[a], SSL/TLS[a], QoS Layer 3 DiffServ, FTP, SFTP, CIFS/SMB, SMTP, Bonjour, UPnP®, SNMP v1/v2c/v3 (MIB-II), DNS, DynDNS, NTP, RTSP, RTP, SRTP, TCP, UDP, IGMP, RTCP, ICMP, DHCP, ARP, SOCKS, SSH, LLDP
System integration	
Application Programming Interface	Open API for software integration, including VAPIX® and AXIS Camera Application Platform; specifications at *axis.com* AXIS Guardian with One-Click Connection ONVIF® Profile G, ONVIF® Profile S and ONVIF® Profile T, specification at *onvif.org*
Analytics	**Included** AXIS License Plate Verifier
Event triggers	Analytics Detectors: live stream accessed, video motion detection, audio detection, day/night mode, shock detection, tampering Hardware: network, temperature Input Signal: digital input port, manual trigger, virtual inputs Storage: disruption, recording System: system ready Time: recurrence, use schedule
Event actions	Record video: SD card and network share Upload of images or video clips: FTP, SFTP, HTTP, HTTPS, network share and email Pre- and post-alarm video or image buffering for recording or upload Notification: email, HTTP, HTTPS, TCP and SNMP trap PTZ: PTZ preset, start/stop guard tour Overlay text, external output activation, day/night mode
Data streaming	Event data
Built-in installation aids	Pixel counter, remote zoom (3x optical), remote focus, auto rotation
General	

Casing	IP66/IP67-, NEMA 4X-, and IK10-rated casing Polycarbonate blend and aluminium Color: white NCS S 1002-B
Sustainability	PVC free
Power	Power over Ethernet IEEE 802.3af/802.3at Type 1 Class 3 Typical: 5.6 W, max 12.95 W
Connectors	Shielded RJ45 10BASE-T/100BASE-TX PoE 3.5 mm mic/line in I/O: 4-pin terminal block for 1 alarm input and 1 output
IR illumination	OptimizedIR with power-efficient, long-life 850 nm IR LEDs
Storage	Support for microSD/microSDHC/microSDXC card Support for SD card encryption Support for recording to network-attached storage (NAS) For SD card and NAS recommendations see *axis.com*
Operating conditions	-40 °C to 60 °C (-40 °F to 140 °F) Humidity 10–100% RH (condensing)
Storage conditions	-40 °C to 65 °C (-40 °F to 149 °F) Humidity 5-95% RH (non-condensing)
Approvals	**EMC** EN 55032 Class A, EN 50121-4, IEC 62236-4, EN 55024, EN 61000-6-1, EN 61000-6-2, FCC Part 15 Subpart B Class A, ICES-003 Class A, VCCI Class A, RCM AS/NZS CISPR 32 Class A, KCC KN32 Class A, KN35 **Safety** IEC/EN/UL 62368-1, IEC/EN/UL 60950-22 **Environment** IEC 60068-2-1, IEC 60068-2-2, IEC 60068-2-6, IEC 60068-2-14, IEC 60068-2-27, IEC 60068-2-78, IEC/EN 60529 IP66/IP67, IEC/EN 62262 IK10, NEMA 250 Type 4X, NEMA TS-2-2003 v02.06 **Network** NIST SP500-267 **Other** IEC 62471
Weight	With weather shield: 1 KG (2.2 lb)
Dimensions	Ø132 x 260 mm (Ø5 3/16 x 10 1/4 in)
Included accessories	Installation guide, Windows® decoder 1-user license, drill hole template, connector kit, mounting bracket AXIS Weather Shield L
Optional accessories	AXIS T94F01M J-Box/Gang Box Plate AXIS T91A47 Pole Mount AXIS T94P01B Corner Bracket AXIS T94F01P Conduit Back Box AXIS Weather Shield K Axis PoE Midspans For more accessories, see *axis.com*
Video management software	AXIS Companion, AXIS Camera Station, video management software from Axis' Application Development Partners available at *axis.com/vms*
Languages	English, German, French, Spanish, Italian, Russian, Simplified Chinese, Japanese, Korean, Portuguese, Traditional Chinese
Warranty	Axis 3-year warranty and AXIS Extended Warranty option, see *axis.com/warranty*

a. *This product includes software developed by the OpenSSL Project for use in the OpenSSL Toolkit. (openssl.org), and cryptographic software written by Eric Young (eay@cryptsoft.com).*

Environmental responsibility:

axis.com/environmental-responsibility

AXIS P1448-LE Network Camera

Fully-featured, all-around 4K surveillance

AXIS P1448-LE Network Camera is a cost-effective, all-around camera providing excellent image quality at full frame rate in 8 megapixel resolution and in 16:9 format. Fully-featured with Lightfinder, OptimizedIR and Forensic WDR, forensic details are captured even in challenging light conditions including low light and strong backlight. Outdoor-ready with a wide temperature range, this sturdy and impact resistant camera has shock detection and is ready for extreme temperatures. AXIS P1448-LE offers easy installation with remote zoom and focus for fine tuning of the picture. With Axis Zipstream, I/O and audio support, AXIS P1448-LE got you covered.

> 4K Ultra HD resolution in full frame rate

> Ease of installation

> Forensic WDR, Lightfinder, and OptimizedIR

> I/O and audio support

> Axis Zipstream technology

AXIS P1448-LE Network Camera

Camera	
Image sensor	1/2.5" progressive scan RGB CMOS
Lens	2.8–9.8 mm, F1.6 Horizontal field of view 109°–37° Vertical field of view 57°–21° Varifocal, Remote focus and zoom, P-Iris control, IR corrected
Day and night	Automatically removable infrared-cut filter
Minimum illumination	**Color:** 0.18 lux, at 50 IRE F1.6 **B/W:** 0.04 lux, at 50 IRE F1.6 0 lux with IR illumination on
Shutter time	1/62500 s to 2 s
Video	
Video compression	H.264 (MPEG-4 Part 10/AVC) Baseline, Main and High Profiles Motion JPEG
Resolution	3840x2160 to 160x90
Frame rate	Up to 25/30 fps (50/60 Hz) in all resolutions
Video streaming	Multiple, individually configurable streams in H.264 and Motion JPEG Axis Zipstream technology in H.264 Controllable frame rate and bandwidth VBR/ABR/MBR H.264
Multi-view streaming	Up to 8 individually cropped out view areas
Image settings	Saturation, contrast, brightness, sharpness, Forensic WDR: Up to 120 dB depending on scene, white balance, day/night threshold, exposure mode, exposure zones, compression, orientation: auto, 0°, 90°, 180°, 270° including Corridor Format, mirroring of images, dynamic text and image overlay, privacy masks
Pan/Tilt/Zoom	Digital PTZ
Audio	
Audio streaming	Audio in, simplex
Audio compression	24bit LPCM, AAC-LC 8/16/32/48 kHz, G.711 PCM 8 kHz, G.726 ADPCM 8 kHz, Opus 8/16/48 kHz Configurable bit rate
Audio input/output	External microphone input or line input
Network	
Security	Password protection, IP address filtering, HTTPS[a] encryption, IEEE 802.1X (EAP-TLS)[a] network access control, digest authentication, user access log, centralized certificate management, brute force delay protection, signed firmware
Supported protocols	IPv4, IPv6 USGv6, HTTP, HTTPS[a], SSL/TLS[a], QoS Layer 3 DiffServ, FTP, SFTP, CIFS/SMB, SMTP, Bonjour, UPnP®, SNMP v1/v2c/v3 (MIB-II), DNS, DynDNS, NTP, RTSP, RTP, SRTP, TCP, UDP, IGMP, RTCP, ICMP, DHCP, ARP, SOCKS, SSH, LLDP
System integration	
Application Programming Interface	Open API for software integration, including VAPIX® and AXIS Camera Application Platform; specifications at *axis.com* AXIS Guardian with One-Click Connection ONVIF® Profile G, ONVIF® Profile S and ONVIF® Profile T, specification at *onvif.org*
Analytics	**Included** AXIS Video Motion Detection **Supported** AXIS Digital Autotracking, AXIS Perimeter Defender, AXIS Cross Line Detection Support for AXIS Camera Application Platform enabling installation of third-party applications, see *axis.com/acap*
Event triggers	Analytics Detectors: live stream accessed, video motion detection, audio detection, day/night mode, shock detection, tampering Hardware: network, temperature Input Signal: digital input port, manual trigger, virtual inputs Storage: disruption, recording System: system ready Time: recurrence, use schedule
Event actions	Record video: SD card and network share Upload of images or video clips: FTP, SFTP, HTTP, HTTPS, network share and email Pre- and post-alarm video or image buffering for recording or upload Notification: email, HTTP, HTTPS, TCP and SNMP trap PTZ: PTZ preset, start/stop guard tour Overlay text, external output activation, day/night mode
Data streaming	Event data
Built-in installation aids	Pixel counter, remote zoom (3.5x optical), remote focus, auto rotation
General	
Casing	IP66/IP67-, NEMA 4X-, and IK10-rated casing Polycarbonate blend and aluminium Color: white NCS S 1002-B
Sustainability	PVC free
Memory	1024 MB RAM, 512 MB Flash
Power	Power over Ethernet IEEE 802.3af/802.3at Type 1 Class 3 Typical: 7.1 W, max 12.95 W
Connectors	Shielded RJ45 10BASE-T/100BASE-TX PoE 3.5 mm mic/line in I/O: 4-pin terminal block for 1 alarm input and 1 output
IR illumination	OptimizedIR with power-efficient, long-life 850 nm IR LEDs Range of reach 25 m (82 ft) or more depending on the scene
Storage	Support for microSD/microSDHC/microSDXC card Support for SD card encryption Support for recording to network-attached storage (NAS) For SD card and NAS recommendations see *axis.com*
Operating conditions	-40 °C to 60 °C (-40 °F to 140 °F) Humidity 10–100% RH (condensing)
Storage conditions	-40 °C to 65 °C (-40 °F to 149 °F) Humidity 5-95% RH (non-condensing)
Approvals	**EMC** EN 55032 Class A, EN 50121-4, IEC 62236-4, EN 55024, EN 61000-6-1, EN 61000-6-2, FCC Part 15 Subpart B Class A, ICES-003 Class A, VCCI Class A, RCM AS/NZS CISPR 32 Class A, KCC KN32 Class A, KN35 **Safety** IEC/EN/UL 62368-1, IEC/EN/UL 60950-22, IS 13252
Weight	With weather shield: 1 KG (2.2 lb)
Dimensions	Ø132 x 260 mm (Ø5 3/16 x 10 1/4 in)
Included accessories	Installation guide, Windows® decoder 1-user license, drill hole template, connector kit, mounting bracket AXIS Weather Shield L
Optional accessories	AXIS T94F01M J-Box/Gang Box Plate AXIS T91A47 Pole Mount AXIS T94P01B Corner Bracket AXIS T94F01P Conduit Back Box AXIS Weather Shield K Axis PoE Midspans For more accessories, see *axis.com*
Video management software	AXIS Companion, AXIS Camera Station, video management software from Axis' Application Development Partners available at *axis.com/vms*
Languages	English, German, French, Spanish, Italian, Russian, Simplified Chinese, Japanese, Korean, Portuguese, Traditional Chinese
Warranty	Axis 3-year warranty and AXIS Extended Warranty option, see *axis.com/warranty*

a. *This product includes software developed by the OpenSSL Project for use in the OpenSSL Toolkit. (openssl.org), and cryptographic software written by Eric Young (eay@cryptsoft.com).*

Environmental responsibility:

axis.com/environmental-responsibility

IV.Security Desk

A.UPS – CyberPower #EC850LCD

B.Workstation Monitor - HP Z24n 24-inch Narrow Bezel IPS Display

C.Workstation – HP Z640 Workstation

CyberPower

EC850LCD ECOLOGIC UPS

Offering advanced energy-saving battery backup and surge protection against power surges and interruptions.

The CyberPower Ecologic EC850LCD UPS safeguards PCs and other electronics from blackouts, brownouts, surges, spikes, sags, and other power abnormalities. Its composite integrated circuitry offers reliable surge protection and battery backup during power interruptions. This UPS utilizes GreenPower UPS™ high efficiency design to reduce power consumption and is an ENERGY STAR® qualified battery backup.

The CyberPower EC850LCD has three surge protected ECO outlets. When ECO mode is on and the battery backup detects that your computer is off or in Sleep mode, computer peripherals connected to the ECO outlets will be turned off (USB connection required). This reduces unneeded power usage and provides greater energy savings.

A Three-Year Warranty ensures that this UPS has passed our highest quality standards in design, assembly, material or workmanship and further protection is offered by a $100,000 Connected Equipment Guarantee.

TYPICAL APPLICATIONS

- Desktop Computers
- Workstations
- Personal Electronics
- Home Networking/VoIP

FEATURES

- 850VA / 510W
- Standby Topology
- Selectable ECO Technology
- GreenPower UPS™ Technology
- ENERGY STAR® Qualified
- Full-time Surge Protection and Battery Backup
- Compact Form Factor
- 12 Outlets / USB Port / RJ11 Protection
- PowerPanel® Personal Edition
- 3-Year Warranty

SPECIFICATIONS

GENERAL	
UPS Topology	Standby
Energy Saving	GreenPower UPS™ High Efficiency
ENERGY STAR®	Yes

INPUT	
Voltage	96Vac - 140Vac
Frequency	47Hz - 63Hz
Plug Type	NEMA 5-15P

EC850LCD ECOLOGIC UPS

SPECIFICATIONS - CONT.

INPUT - CONT.	
Plug Style	Right Angle - 45° Offset
Cord Length	5′
OUTPUT	
VA	850
Watts	510
On Battery Voltage	120Vac ± 5%
On Battery Frequency	50/60Hz ± 1% (auto-sensing)
On Battery Waveform	Simulated Sine Wave
Outlets - Total	12
Outlet Type	NEMA 5-15R
Outlets - Eco Controlled	3
Outlets - Battery & Surge Protected	6
Outlets - Surge-Only Protected	6
Outlets - Widely Spaced	4
Overload Protection	Internal circuitry limiting / circuit breaker
Transfer Time	4ms
BATTERY	
Runtimes	10.4 min. (210W), 2.15 min. (425W)
Runtime at Half Load (min)	6
Runtime at Full Load (min)	1
Battery Type	Sealed Lead-Acid
Field-serviceable Battery	Replaceable by qualified technician
Typical Recharge Time	8 Hours
SURGE PROTECTION & FILTERING	
Surge Suppression	526 Joules
Phone Protection RJ11	1-In, 1-Out
EMI/RFI Filtration	Yes

MANAGEMENT & COMMUNICATIONS	
Multifunction LCD Panel	Yes
HID Compliant USB Port	Yes
Management Cable	USB Cable
LED Indicators	Power On, ECO on/off
Audible Alarms	On Battery, Low Battery, Overload
Software	PowerPanel® Personal Edition
PHYSICAL	
Form Factor	Compact
Keyhole Mounting Slots	Yes
Dimensions (WxHxD) (in.)	12.2 x 3.1 x 7
Weight (lbs.)	7.7
ENVIRONMENTAL	
Operating Temperature	32°F to 104°F / 0°C to 40°C
Operating Relative Humidity	0% - 90% non-condensing
Operating Elevation	0-10000 feet (0-3000 meters)
Storage Temperature	5°F to 113°F / -15°C to 45 °C
Storage Relative Humidity	0% - 95% non-condensing
Storage Elevation	0-50000 feet (0-15000 meters)
CERTIFICATIONS	
Safety	UL1778, cUL 107.3, FCC DOC Class B
Environmental	RoHS Compliant
WARRANTY	
Product Warranty	3 Years
Connected Equipment Guarantee	Lifetime
CEG Amount	$100,000

III. Security Desk

B.Workstation Monitor - HP Z24n 24-inch Narrow Bezel IPS Display

Datasheet

HP Z24n 24-inch Narrow Bezel IPS Display

Create a seamless 16:10 multi-display[1] setup with the HP Z24n Narrow Bezel IPS Display, which has a virtually borderless screen for maximum impact imagery, factory color calibration to ensure optimal color accuracy, and flexible connectivity for all of your devices.

Virtually borderless viewing.

- Enjoy a stunning visual experience with a 1920 x 1200 resolution[2] and more than two million pixels. Maximize your view of the 24-inch diagonal screen and seamlessly tile multiple displays[1] with a design that only has a border on one side.

Out-of-the-box color.

- Count on a factory-calibrated 99% sRGB color gamut from the very first time you power on for reliable, accurate color between displays and from project to project.

Ports aplenty for a perfect workspace.

- Connect to your everyday devices with integrated HDMI, mDP, DP, MHL[3], DVI, and a USB 3.0 hub with a fast-charging port. The DisplayPort output allows you to daisy chain up to two displays[1] with just one PC or workstation connection.

- Use picture-in-picture or picture-by-picture to get views from your connected devices and boost your multi-tasking productivity.
- Work comfortably with adjustable tilt, height adjustment, and swivel settings. Use pivot rotation to customize portrait or landscape views when using multiple displays. An integrated HP Quick Release Bracket supports wall mounting.[4]
- Rest assured that your IT investment is supported by a three-year standard limited warranty. To extend your protection beyond the standard limited warranty, select optional HP Care Pack Services.[5]
- Reduce power consumption and lower costs with an intelligent, energy-efficient, low-halogen[6] design that is ENERGY STAR® certified, TCO qualified, and EPEAT® Gold registered[7] with mercury-free display backlights and arsenic-free display glass.

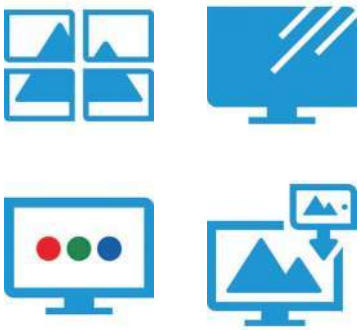

HP Z24n 24-inch Narrow Bezel IPS Display Specifications Table



Product Number	K7B99A4
Display Size (diagonal)	24"
Display Type	IPS w/LED backlight
Panel Active Area	20.39 x 12.75 in; 518 x 324 mm
Viewing Angle	178° horizontal; 178° vertical
Brightness	300 cd/m² [1]
Contrast Ratio	1000:1 static; 5000000:1 dynamic [1]
Response Ratio	8 ms gray to gray [1]
Aspect Ratio	16:10
Native Resolution	1920 x 1200
Resolutions Supported	1920 x 1200; 1920 x 1080; 1680 x 1050; 1600 x 1200; 1600 x 900; 1440 x 900; 1366 x 768; 1280 x 1024; 1280 x 720; 1024 x 768; 800 x 600; 640 x 480
Display Features	Plug and Play; Anti-glare; User programmable; Language selection; On-screen controls; LED Backlights; In plane switching
Input Signal	1 MHL 2.0 /HDMI 1.4; 1 DVI-D; 2 DisplayPort 1.2; HDCP support on all input
Ports and Connectors	4 USB 3.0 (four downstream and one upstream); 1 audio output
Input Power	Input voltage: 100 to 240 VAC
Power Consumption	70 W (maximum), 36 W (typical), 0.5 W (standby)
Dimensions with Stand (W x D x H)	21.01 x 8.27 x 20.48 in 53.38 x 21.01 x 52.02 cm
Dimensions without Stand (W x D x H)	21.01 x 1.94 x 13.82 in 53.38 x 4.93 x 35.11 cm
Weight	12.71 lb 5.78 kg With stand
Ergonomic Features	Tilt: -2 to +22°; Swivel: 45° ±2°; Pivot rotation: 90°
Environmental	Arsenic-free display glass; Mercury-free display backlights; Low halogen [2]
Energy Efficiency Compliance	ENERGY STAR® certified
What is in the Box	Monitor; AC power cord; USB cable; DisplayPort cable; DisplayPort mini cable; CD (includes user guide, warranty, drivers); HP Display Assistant software
Warranty	Protected by HP, including a 3-year standard limited warranty. Optional HP Care Pack Services are extended service contracts that extend your protection beyond the standard warranties. Service levels and response times for HP Care Packs may vary depending on your geographic location. Service starts on date of hardware purchase. Restrictions and limitations apply. For details, visit www.hp.com/go/cpc. HP services are governed by the applicable HP terms and conditions of service provided or indicated to Customer at the time of purchase. Customer may have additional statutory rights according to applicable local laws, and such rights are not in any way affected by the HP terms and conditions of service or the HP Limited Warranty provided with your HP Product.

See important legal disclaimers on the last page

Accessories and services (not included)

HP Single Monitor Arm

The HP Single Monitor Arm is the perfect desk accessory for your work life. Sleek and streamlined, the HP Single Monitor Arm is designed to complement the way you work.
Product number: BT861AA

HP Quick Release Bracket

HP Quick Release is an easy to use, 100 mm VESA-compliant, LCD monitor mounting solution that allows you to quickly and securely attach a flat panel monitor to a variety of stands, brackets, arms or wall mounts. HP Quick Release can also be used for mounting any combination of devices that are compatible with the 100 mm VESA Flat Display Mounting Interface Standard. The failsafe "Sure-Lock" mechanism snaps the monitor (or mounted device) securely in place, and can be further secured with a theft-deterrent security screw.
Product number: EM870AA

HP LCD Speaker Bar

The LCD Speaker Bar seamlessly attached to the bezel of the HP Business Monitor and provides full multimedia capabilities.
Product number: NQ576AA

HP Business PC Security Lock Kit

Protect your HP Business PC from tampering or theft in public locations by locking-down peripherals such as mice, keyboards, monitors or USB security devices and preventing the removal of the PC chassis cover.
Product number: PV606AA

HP DisplayPort Cable Kit

HP DisplayPort Cable Kit
Product number: VN567AA

III. Security Desk

C.Workstation – HP Z640 Workstation

Datasheet

HP Z640 Workstation

Redefine versatility and flexibility. Expand your capabilities with HP's Z640 Workstation offering powerful performance, whisper-quiet computing, and tool-less access in compact design.

- Windows 10 Pro[1]
- Intel® Xeon™ processors[2]

Power up

Experience massive workstation power with support for 145W processors powering up to 36 cores in a dual Intel® Xeon® processor configuration.[3] The HP Z640 Workstation uses Z DNA to provide a high-end workstation experience.

Versatility redefined

Build the perfect workstation for your needs. The HP Z640 Workstation featuring Windows 8.1[1] provides incredible expansion in a small footprint. With up to 8 memory DIMMs, up to 4 internal hard drives, optional Thunderbolt™ 2,[4] and the HP Z Turbo Drive, you get storage, performance, and the freedom to create.

Experience the quiet

Concentrate on your work using a workstation that is whisper quiet. When every inch, watt, and decibel makes a difference, count on the HP Z640 Workstation.

Featuring:

- Achieve the performance you need with the ability to support two next generation Intel® Xeon® processors for up to 36 total processor cores in one system.[2]
- Take productivity up a notch with the ability to do more thanks to NVIDIA® professional graphics cards in 2D or 3D.[5]
- Get serious about graphics and reach peak productivity with access to a breadth of AMD professional graphics from entry to high-end 3D.[5]
- Maximize your time and increase your capabilities with USB and SATA ports, plus lightning-fast data transfers using optional Thunderbolt™ 2 technology.[4]
- A tool-free chassis boasts low acoustics, single integrated Gb Ethernet, a front and rear handle, rear ledge and is 4U rack mountable—all in a compact design.
- Reduce boot up, calculation, and graphics response and revolutionize how your HP Z640 handles large files with the HP Z Turbo Drive, a remarkably fast and innovative storage solution.
- Take multitasking to a new level with the ability to easily connect and work on up to eight displays.[6]
- Optimize this HP Z640 for peak performance. HP Performance Advisor[7] configures your system with updated settings and drivers to help maximize performance.
- Each HP Z640 Workstation works with HP Client Management Solutions,[8] and optional LANDesk[9] to deploy, manage, and secure your PC.

HP Z640 Workstation Specifications Table

Form Factor	Tower
Operating System	Windows 10 Pro 64 [1] Windows 10 Home 64 [1] Windows 8.1 Pro 64 [2] Windows 7 Professional 64 [2] Windows 7 Professional 64 (available through downgrade rights from Windows 10 Pro 64) [3] HP Installer Kit for Linux® (HP Linux Installer Kit includes drivers for 64-bit versions of Red Hat® Enterprise Linux 6.7 and 7, SUSE Linux Enterprise Desktop 11 and Ubuntu 14.04. Red Hat Enterprise Linux (1-year paper license only) is available as a second operating system.)
Processor Family	Intel® Xeon® E5 1600 v3 processor; Intel® Xeon® E5 2600 v3 processor; Intel® Xeon® E5 2600 v4 processor; Intel® Xeon® E5 1600 v4 processor
Processors[5,6]	Intel® Xeon® E5-2697 v4 (2.3 GHz, 45 MB cache, 18 cores, Intel® vPro™) Intel® Xeon® E5-2695 v4 (2.1 GHz, 45 MB cache, 18 cores, Intel® vPro™) Intel® Xeon® E5-2690 v4 (2.6 GHz, 35 MB cache, 14 cores, Intel® vPro™) Intel® Xeon® E5-2683 v4 (2.1 GHz, 40 MB cache, 16 cores, Intel® vPro™) Intel® Xeon® E5-2680 v4 (2.4 GHz, 35 MB cache, 14 cores, Intel® vPro™) Intel® Xeon® E5-2667 v4 (3.2 GHz, 25 MB cache, 8 cores, Intel® vPro™) Intel® Xeon® E5-2660 v4 (2 GHz, 35 MB cache, 14 cores, Intel® vPro™) Intel® Xeon® E5-2650 v4 (2.2 GHz, 30 MB cache, 12 cores, Intel® vPro™) Intel® Xeon® E5-2643 v4 (3.4 GHz, 20 MB cache, 6 cores, Intel® vPro™) Intel® Xeon® E5-2640 v4 (2.4 GHz, 25 MB cache, 10 cores, Intel® vPro™) Intel® Xeon® E5-2637 v4 (3.5 GHz, 15 MB cache, 4 cores, Intel® vPro™) Intel® Xeon® E5-2630 v4 (2.2 GHz, 25 MB cache, 10 cores, Intel® vPro™) Intel® Xeon® E5-2623 v4 (2.6 GHz, 10 MB cache, 4 cores, Intel® vPro™) Intel® Xeon® E5-2620 v4 (2.1 GHz, 20 MB cache, 8 cores, Intel® vPro™) Intel® Xeon® E5-2609 v4 (1.7 GHz, 20 MB cache, 8 cores, Intel® vPro™) Intel® Xeon® E5-2603 v4 (1.7 GHz, 15 MB cache, 6 cores, Intel® vPro™) Intel® Xeon® E5-1680 v4 (3.4 GHz, 20 MB cache, 8 cores, Intel® vPro™) Intel® Xeon® E5-1660 v4 (3.2 GHz, 20 MB cache, 8 cores, Intel® vPro™) Intel® Xeon® E5-1650 v4 (3.6 GHz, 15 MB cache, 6 cores, Intel® vPro™) Intel® Xeon® E5-1630 v4 (3.7 GHz, 10 MB cache, 4 cores, Intel® vPro™) Intel® Xeon® E5-1620 v4 (3.5 GHz, 10 MB cache, 4 cores, Intel® vPro™) Intel® Xeon® E5-1607 v4 (3.1 GHz, 10 MB cache, 4 cores, Intel® vPro™) Intel® Xeon® E5-1603 v4 (2.8 GHz, 10 MB cache, 4 cores, Intel® vPro™) Intel® Xeon® E5-2699 v3 (2.3 GHz, 45 MB cache, 18 cores, Intel® vPro™) Intel® Xeon® E5-2697 v3 (2.6 GHz, 35 MB cache, 14 cores, Intel® vPro™) Intel® Xeon® E5-2695 v3 (2.3 GHz, 35 MB cache, 14 cores, Intel® vPro™) Intel® Xeon® E5-2690 v3 (2.6 GHz, 30 MB cache, 12 cores, Intel® vPro™) Intel® Xeon® E5-2683 v3 (2 GHz, 35 MB cache, 14 cores, Intel® vPro™) Intel® Xeon® E5-2680 v3 (2.5 GHz, 30 MB cache, 12 cores, Intel® vPro™) Intel® Xeon® E5-2670 v3 (2.3 GHz, 30 MB cache, 12 cores, Intel® vPro™) Intel® Xeon® E5-2667 v3 (3.2 GHz, 20 MB cache, 8 cores, Intel® vPro™) Intel® Xeon® E5-2660 v3 (2.6 GHz, 25 MB cache, 10 cores, Intel® vPro™) Intel® Xeon® E5-2650 v3 (2.3 GHz, 25 MB cache, 10 cores, Intel® vPro™) Intel® Xeon® E5-2643 v3 (3.4 GHz, 20 MB cache, 6 cores, Intel® vPro™) Intel® Xeon® E5-2640 v3 (2.6 GHz, 20 MB cache, 8 cores, Intel® vPro™) Intel® Xeon® E5-2637 v3 (3.5 GHz, 15 MB cache, 4 cores, Intel® vPro™) Intel® Xeon® E5-2630 v3 (2.4 GHz, 20 MB cache, 8 cores, Intel® vPro™) Intel® Xeon® E5-2623 v3 (3 GHz, 10 MB cache, 4 cores, Intel® vPro™) Intel® Xeon® E5-2620 v3 (2.4 GHz, 15 MB cache, 6 cores, Intel® vPro™) Intel® Xeon® E5-2609 v3 (1.9 GHz, 15 MB cache, 6 cores, Intel® vPro™) Intel® Xeon® E5-2603 v3 (1.6 GHz, 15 MB cache, 6 cores, Intel® vPro™) Intel® Xeon® E5-1680 v3 (3.2 GHz, 20 MB cache, 8 cores, Intel® vPro™) Intel® Xeon® E5-1660 v3 (3 GHz, 20 MB cache, 8 cores, Intel® vPro™) Intel® Xeon® E5-1650 v3 (3.5 GHz, 15 MB cache, 6 cores, Intel® vPro™) Intel® Xeon® E5-1630 v3 (3.7 GHz, 10 MB cache, 4 cores, Intel® vPro™) Intel® Xeon® E5-1620 v3 (3.5 GHz, 10 MB cache, 4 cores, Intel® vPro™) Intel® Xeon® E5-1607 v3 (3.1 GHz, 10 MB cache, 4 cores, Intel® vPro™) Intel® Xeon® E5-1603 v3 (2.8 GHz, 10 MB cache, 4 cores, Intel® vPro™)
Chipset	Intel® C612
Maximum Memory	Up to 256 GB DDR4-2400 ECC registered SDRAM [10] (Transfer rates up to 2400 MT/s. Only registered and load-reduced memory is supported.)
Memory Slots	4 DIMM (with 1 processor) and 8 DIMM (with 2 processors)

Drive Controllers	Integrated SATA 6.0 Gb/s; LSI 9217-4i4e 8-port SAS 6.0 Gb/s RAID (optional); LSI MegaRAID® 9270-8i SAS 6.0 Gb/s ROC RAID Card and iBBU09 Battery Backup Unit (optional); Factory integrated RAID available for SATA/SAS drives (RAID 0, 0 Data, 1, 5, and 10); Factory integrated RAID available for PCIe SSDs (RAID 0 Data)
Internal Storage	300 GB up to 600 GB SAS (15000 rpm) [7] 300 GB up to 1.2 TB SAS (10000 rpm) [7] 500 GB up to 4 TB SATA (7200 rpm) [7] 500 GB SATA SED (7200 rpm) [7] 128 GB up to 1 TB SATA SSD [7] 256 GB up to 512 GB SATA SED SSD [7] 1 TB (8 GB cache) SATA SSHD (7200 rpm) [7] 256 GB up to 512 GB HP Z Turbo Drive (PCIe SSD) [7] 256 GB up to 1 TB HP Z Turbo Drive G2 (PCIe SSD) [7] 512 GB (2x256 GB) up to 2 TB (4x512 GB) HP Z Turbo Drive Quad Pro (PCIe SSD) [7]
Optical Storage	Slim SATA DVD-ROM; Slim SATA SuperMulti DVD writer; Slim SATA BDXL Blu-ray writer [8,9]
Additional Storage	15-in-1 media card reader (optional); HP DX115 Removable HDD Frame/Carrier (optional)
Available Graphics	Professional 2D: NVIDIA® NVS™ 310 (1 GB); NVIDIA® NVS™ 315 (1 GB); NVIDIA® NVS™ 510 (2 GB) Entry 3D: NVIDIA® Quadro® K420 (2 GB); NVIDIA® Quadro® K620 (2 GB); AMD FirePro™ W2100 (2 GB) Mid-range 3D: NVIDIA® Quadro® M2000 (4 GB); NVIDIA® Quadro® K2200 (4 GB); NVIDIA® Quadro® K1200 (4 GB); AMD FirePro™ W4300 (4 GB); AMD FirePro™ W5100 (4 GB) High-end 3D: NVIDIA® Quadro® M6000 (24 GB); NVIDIA® Quadro® M6000 (12 GB); NVIDIA® Quadro® M5000 (8 GB); NVIDIA® Quadro® M4000 (8 GB); AMD FirePro™ W7100 (8 GB) High Performance GPU Computing: NVIDIA® Tesla® K40
Audio	Integrated Realtek HD ALC221
Networking	Integrated Intel® I218LM PCIe GbE; Intel® I210-T1 PCIe GbE (optional); HP X540-T2 10 GbE Dual Port Adapter (optional); HP X520 10 GbE Dual Port Adapter (optional); HP 10 GbE SFP+SR Transceiver (optional); HP 361T PCIe dual-port gigabit (optional); Intel® 7260 802.11a/b/g/n PCIe WLAN (optional); Intel® 8260 802.11 a/b/g/n/ac with Bluetooth® 4.2 PCIe NIC (optional)[11]
Expansion Slots	2 PCIe Gen3 x16; 1 PCIe Gen3 x8 (open-ended); 1 PCIe Gen2 x4 (open-ended); 1 PCIe Gen2 x1 (open-ended); 1 PCI (Open-ended connector allows a greater bandwidth card to be installed physically into a lower bandwidth connector/slot.)
Ports and Connectors	Front: 4 USB 3.0; 1 headset; 1 microphone Back: 4 USB 3.0; 2 USB 2.0; 2 PS/2; 1 RJ-45; 1 audio line in; 1 audio line out Internal: 1 USB 2.0; 1 USB 3.0
Drive Bays (Internal)	Two 3.5"
Drive Bays (External)	Two 5.25"; One slim ODD
Input Device	HP PS/2 Keyboard; HP USB Keyboard; HP USB SmartCard Keyboard; HP Wireless Keyboard and Mouse; HP PS/2 Business Slim Keyboard; HP USB Business Slim Keyboard; HP Wireless Business Slim Keyboard[12] HP PS/2 Mouse; HP USB Optical Mouse; HP USB 1000 dpi Laser Mouse; HP USB Optical 3-Button Mouse; HP SpacePilot Pro 3D USB Intelligent Controller; 3Dconnexion CADMouse; HP USB Hardened Mouse[12]
Software	HP Performance Advisor; HP Remote Graphics Software (RGS) 7.2; CyberLink PowerDVD/Power2Go; Foxit PhantomPDF Express; Buy Office [15]
Security	HP Solenoid Hood Lock & Hood Sensor; HP Business PC Security Lock Kit; TPM 1.2 certified; HP Keyed Cable Lock (optional) [12]
Power	925 W 90% efficient, active PFC
Dimensions (W x D x H)	6.75 x 18.3 x 17.5 in 17.5 x 46.48 x 44.45 cm
Weight	33.1 lb 15 kg (Exact weight depends upon configuration.)
Energy Efficiency Compliance	ENERGY STAR® certified and EPEAT® registered configurations available [13]
Environmental Certification	Low halogen[14]
Compatible Displays	All HP Z Displays and HP DreamColor Displays are supported. For more information see www.hp.com/go/zdisplays.
Warranty	Protected by HP Services, including a 3 years parts, 3 years labor, and 3 years onsite service (3/3/3) standard limited warranty. Certain restrictions

HP Z640 Workstation

Recommended accessories and services (not included)

HP Z24n 24-inch Narrow Bezel IPS Display (ENERGY STAR)

Create a seamless 16:10 multi-display setup with the HP Z24n Narrow Bezel IPS Display, which has a virtually borderless screen for maximum impact imagery, factory color calibration to ensure optimal color accuracy, and flexible connectivity for all of your devices.
Product number: K7B99A8

HP 16GB (1x16GB) DDR4-2400 ECC Reg RAM

Boost the capabilities of your HP Workstation and improve system performance and application responsiveness with low-power, high-speed DDR4 memory from HP.
Product number: T9V40AT

HP Z Turbo Drive G2 512GB PCIe Solid State Drive

Super charge your productivity and creativity and deliver optimized HP Workstation workflows with the HP Z Turbo Drive G2 PCIe SSD, which delivers four times the read performance of traditional SSDs at a cost that's remarkably similar.
Product number: M1F74AT

HP 2TB SATA 6Gb/s 7200 Hard Drive

SATA 7200 rpm drives are our standard high bandwidth hard drive storage options; most workstation models are also available with high performance 10K rpm rotation speeds. Storage capabilities range up to a massive 2.0 TB.
Product number: QB576AA

HP Thunderbolt-2 PCIe 1-port I/O Card

Ultra-fast backup, editing, and file sharing, and reduce the time on tasks on select HP Z Workstations with this 1-port I/O Card driven by Thunderbolt™ 2 technology. Power through projects with data transfer speeds nearly 4x that of USB 3.0.
Product number: F3F43AA

HP 5 year Next Business Day Onsite with Defective Media Retention

Defective Media Retention (DMR) allows you to keep your hard drive if it is defective and requires replacement while under warranty. You maintain control of your sensitive data, and dispose of the defective media in a way that meets your security standards
Product number: UE344E

V. School Guard Glass

A. SG4

B. SG4-IGU

C. SG5

D. SG5-IGU

School Guard Glass' products are manufactured by:

LTI Smart Glass, Inc.

14 Federico Drive / Pittsfield, MA 01201 /

PRODUCT NAME: **SG4™ IGU (PATENT PENDING)**

PRODUCT DESCRIPTION: SG4™ IGU is a hermetically sealed make up consisting of SG4™ on the interior lite and tempered or laminated glass on the exterior lite. SG4™ IGU combines the forced entry attributes of SG4™ while also complying with strict energy codes. Our IGU make up can be combined with almost any glass coating for an aesthetically pleasing and energy efficient window or entrance.

CONSTRUCTION: SG4™ on interior lite, tempered or laminated glass on exterior lite.

STANDARD DIMENSIONS: Up to 60" x 96"

MAXIMUM DIMENSIONS: 72" x 144" (Up to 50 sq. ft.)

NOMINAL THICKNESS: 1" - 1 ½"

WEIGHT (SQ/FT): 7.4 lbs.

WARRANTY: 10 year warranty against delamination and 10 year warranty against seal failure. Please refer to the warranty information sheets.

INSTALLATION INSTRUCTIONS: Notify a School Guard Glass representative and request installation instructions pertaining to the glazing system(s) being used.

COMPLIANCE:

- ASTM 1048 – Standard Specification-Heat Strengthened & Fully Tempered Flat Glass
- ASTM C1036 - Standard Specification-Flat Glass
- ASTM C1172 - Standard Specification for Laminated Architectural Flat Glass
- ANSI Z97.1 Safety Materials Used in Buildings
- CPSC 16 CFR 1201

RATINGS: 5-aa1 rated for 6 minutes.
BR Level 2 low spall in certain configurations.
UL 972

PERFORMANCE CRITERIA/VALUES: Values vary.
Please refer to the performance criteria sheets.

	Ballistic Impact	Concentrated Assault		Forced Entry (sequentially tested)			
Product	**5 shots with a .762 round**	**Brick**	**Steel Toed Boots**	**Tools[1] 2 min. test**	**3lb. Hammer & Bat 3½ min. test**	**Sledge hammer 6 min. test**	**Total Time to Failure**
1/4" Tempered	Fail - 1 shot	Fail	Fail	Fail	Fail	Fail	0 seconds
1/4" Tempered w/12 mil. Blast Film	Pass[2]	Fail - 4 impacts	Pass	Fail - 8 seconds	Fail - 2 impacts/2 seconds	N/A	4 seconds
5/16" Annealed Laminated Glass w/ 0.060 SGP® Interlayer by DuPont ®	Pass[2]	Fail - 20 impacts	Fail	Fail	Fail	N/A	16 seconds
5/16" Annealed Laminated Glass w/ 0.090 PVB Interlayer	Pass[2]	Pass	Pass	Fail - 40 seconds	Fail	N/A	40 seconds
3/8" Glass Clad Polycarbonate	Pass[2]	Pass	Pass	Fail - 1 min. 12 sec.	Fail	N/A	1 min. 12 sec.
SG4™ IGU	Pass[2]	Pass	Pass	Pass	Pass	N/A	6 mins. 10 sec.
Test failure occurs when a 4" object can pass through the glass or frame material.							
[1] See testing methods for tools list. [2]Bullets penetrate but glass stays in place.							

Independent Testing Completed by H.P. White Laboratory, Inc. 3114 Scarboro Road, Street, MD 21154-1822

School Guard Glass' products are manufactured by:

LTI Smart Glass, Inc.

14 Federico Drive / Pittsfield, MA 01201 /

PRODUCT NAME: **SG5™ (PATENT PENDING)**

PRODUCT DESCRIPTION: SG5™ is a laminated glass product consisting of outer layers of glass with a custom security, heat strengthened, chemically bonded core. The patent pending SG5™ core reacts to physical abuse like metal and will bend, but will not tear or rip like other security products. SG5™ is designed to replace glass used in openings that would normally be glazed with ¼" or 5/16" glass.

CONSTRUCTION: Proprietary

MAXIMUM DIMENSIONS: 48" x 96" (Up to 50 sq. ft.)

NOMINAL THICKNESS: Designed to replace tempered and laminated glass with thicknesses ranging from ¼" to ⅜".

WEIGHT (SQ/FT): 4.6 lbs.

WARRANTY: 10 Years against delamination. Please refer to the warranty information sheet.

INSTALLATION INSTRUCTIONS: Notify a School Guard Glass representative and request installation instructions pertaining to the glazing system(s) being used.

COMPLIANCE:

- ASTM C1036 - Standard Specification-Flat Glass
- ASTM C1172 - Standard Specification for Laminated Architectural Flat Glass
- ANSI Z97.1 Safety Materials Used in Buildings
- CPSC 16 CFR 1201

RATINGS: UL 972
5-aa1 rated for 12 minutes.
ASTM F1233 Class 1.4 (Tested to 5 minutes of class 1.5 until failure)

	Ballistic Impact	**Concentrated Assault**		**Forced Entry (sequentially tested)**			
Product	**5 shots with a .762 round**	**Brick**	**Steel Toed Boots**	**Tools[1] 2 min. test**	**3lb. Hammer & Bat 3½ min. test**	**Sledge hammer 6 min. test**	**Total Time to Failure**
1/4" Tempered	Fail - 1 shot	Fail	Fail	Fail	Fail	Fail	0 seconds
1/4" Tempered w/12 mil. Blast Film	Pass[2]	Fail - 4 impacts	Pass	Fail - 8 seconds	Fail - 2 impacts/2 seconds	N/A	4 seconds
5/16" Annealed Laminated Glass w/ 0.060 SGP® Interlayer by DuPont ®	Pass[2]	Fail - 20 impacts	Fail	Fail	Fail	N/A	16 seconds
5/16" Annealed Laminated Glass w/ 0.090 PVB Interlayer	Pass[2]	Pass	Pass	Fail - 40 seconds	Fail	N/A	40 seconds
3/8" Glass Clad Polycarbonate	Pass[2]	Pass	Pass	Fail - 1 min. 12 sec.	Fail	N/A	1 min. 12 sec.
SG5™	Pass[2]	Pass	Pass	Pass	Pass	Pass–6 mins.	12 mins. 10 sec.
Test failure occurs when a 4" object can pass through the glass or frame material.							
[1] See testing methods for tools list. [2]Bullets penetrate but glass stays in place.							

Independent Testing Completed by H.P. White Laboratory, Inc. 3114 Scarboro Road, Street, MD 21154-1822

School Guard Glass' products are manufactured by:

LTI Smart Glass, Inc.

14 Federico Drive / Pittsfield, MA 01201 /

PRODUCT NAME: **SG5™ IGU (PATENT PENDING)**

PRODUCT DESCRIPTION: SG5™ IGU is a hermetically sealed make up consisting of SG5™ on the interior lite and tempered or laminated glass on the exterior lite. SG5™ IGU combines the forced entry attributes of SG5™ while also complying with strict energy codes. Our IGU make up can be combined with almost any glass coating for an aesthetically pleasing and energy efficient window or entrance.

CONSTRUCTION: SG5™ on interior lite, tempered or laminated glass on exterior lite.

MAXIMUM DIMENSIONS: 48" x 96" (Up to 50 sq. ft.)

NOMINAL THICKNESS: 1 ⅛" - 1 ½"

WEIGHT (SQ/FT): 7.9 lbs.

WARRANTY: 10 year warranty against delamination and 10 year warranty against seal failure. Please refer to the warranty information sheet.

INSTALLATION INSTRUCTIONS: Notify a School Guard Glass representative and request installation instructions pertaining to the glazing system(s) being used.

COMPLIANCE:

- ASTM 1048 – Standard Specification-Heat Strengthened & Fully Tempered Flat Glass
- ASTM C1036 - Standard Specification-Flat Glass
- ASTM C1172 - Standard Specification for Laminated Architectural Flat Glass
- ANSI Z97.1 Safety Materials Used in Buildings
- CPSC 16 CFR 1201

RATINGS: 5-aa1 rated for 12 minutes.
BR Level 2 low spall in certain configurations.
ASTM F1233 Class 1.4 (Tested to 5 minutes of class 1.5 until failure)
UL 972

PERFORMANCE CRITERIA/VALUES: Values vary.
Please refer to the performance criteria sheets.

	Ballistic Impact	Concentrated Assault		Forced Entry (sequentially tested)			
Product	**5 shots with a .762 round**	**Brick**	**Steel Toed Boots**	**Tools[1] 2 min. test**	**3lb. Hammer & Bat 3½ min. test**	**Sledge hammer 6 min. test**	**Total Time to Failure**
1/4" Tempered	Fail - 1 shot	Fail	Fail	Fail	Fail	Fail	0 seconds
1/4" Tempered w/12 mil. Blast Film	Pass[2]	Fail - 4 impacts	Pass	Fail - 8 seconds	Fail - 2 impacts/2 seconds	N/A	4 seconds
5/16" Annealed Laminated Glass w/ 0.060 SGP® Interlayer by DuPont ®	Pass[2]	Fail - 20 impacts	Fail	Fail	Fail	N/A	16 seconds
5/16" Annealed Laminated Glass w/ 0.090 PVB Interlayer	Pass[2]	Pass	Pass	Fail - 40 seconds	Fail	N/A	40 seconds
3/8" Glass Clad Polycarbonate	Pass[2]	Pass	Pass	Fail - 1 min. 12 sec.	Fail	N/A	1 min. 12 sec.
SG5™ IGU	Pass[2]	Pass	Pass	Pass	Pass	Pass–6 mins.	12 mins. 10 sec.
Test failure occurs when a 4" object can pass through the glass or frame material.							
[1] See testing methods for tools list. [2]Bullets penetrate but glass stays in place.							

Independent Testing Completed by H.P. White Laboratory, Inc. 3114 Scarboro Road, Street, MD 21154-1822

School Guard Glass' products are manufactured by:

LTI Smart Glass, Inc.

14 Federico Drive / Pittsfield, MA 01201 /

PRODUCT NAME: **SG4™ (PATENT PENDING)**

PRODUCT DESCRIPTION: SG4™ is a laminated glass product consisting of outer layers of glass with a custom security strengthened substrate core. It is specifically designed to slow down intruders but is not bullet resistant to certain ballistic threats. When shot, it will not shatter like ordinary tempered glass and is far stronger than laminated glass or glass reinforced with security film. SG4™ remains in the frame blocking the intruder from entry.

CONSTRUCTION: Proprietary

STANDARD DIMENSIONS: Up to 60" x 96"

MAXIMUM DIMENSIONS: 72" x 144" (Up to 50 sq. ft.)

NOMINAL THICKNESS: Designed to replace tempered and laminated glass with thicknesses ranging from ¼" to ⅜".

WEIGHT (SQ/FT): 4.1 lbs.

WARRANTY: 10 Years against delamination. Please refer to the warranty information sheet.

INSTALLATION INSTRUCTIONS: Notify a School Guard Glass representative and request installation instructions pertaining to the glazing system(s) being used.

COMPLIANCE:
- ASTM C1036 - Standard Specification-Flat Glass
- ASTM C1172 - Standard Specification for Laminated Architectural Flat Glass
- ANSI Z97.1 Safety Materials Used in Buildings
- CPSC 16 CFR 1201

RATINGS: UL 972
5-aa1 rated for 6 minutes.

	Ballistic Impact	Concentrated Assault		Forced Entry (sequentially tested)			
Product	**5 shots with a .762 round**	**Brick**	**Steel Toed Boots**	**Tools[1] 2 min. test**	**3lb. Hammer & Bat 3½ min. test**	**Sledge hammer 6 min. test**	**Total Time to Failure**
1/4" Tempered	Fail - 1 shot	Fail	Fail	Fail	Fail	Fail	0 seconds
1/4" Tempered w/12 mil. Blast Film	Pass[2]	Fail - 4 impacts	Pass	Fail - 8 seconds	Fail - 2 impacts/2 seconds	N/A	4 seconds
5/16" Annealed Laminated Glass w/ 0.060 SGP® Interlayer by DuPont ®	Pass[2]	Fail - 20 impacts	Fail	Fail	Fail	N/A	16 seconds
5/16" Annealed Laminated Glass w/ 0.090 PVB Interlayer	Pass[2]	Pass	Pass	Fail - 40 seconds	Fail	N/A	40 seconds
3/8" Glass Clad Polycarbonate	Pass[2]	Pass	Pass	Fail - 1 min. 12 sec.	Fail	N/A	1 min. 12 sec.
SG4™	Pass[2]	Pass	Pass	Pass	Pass	N/A	6 mins. 10 sec.
Test failure occurs when a 4" object can pass through the glass or frame material.							
[1] See testing methods for tools list. [2]Bullets penetrate but glass stays in place.							

Independent Testing Completed by H.P. White Laboratory, Inc. 3114 Scarboro Road, Street, MD 21154-1822

VI. Wall Hardening Details

PENETRATION RESISTANT WALL CONSTRUCTION DETAIL.

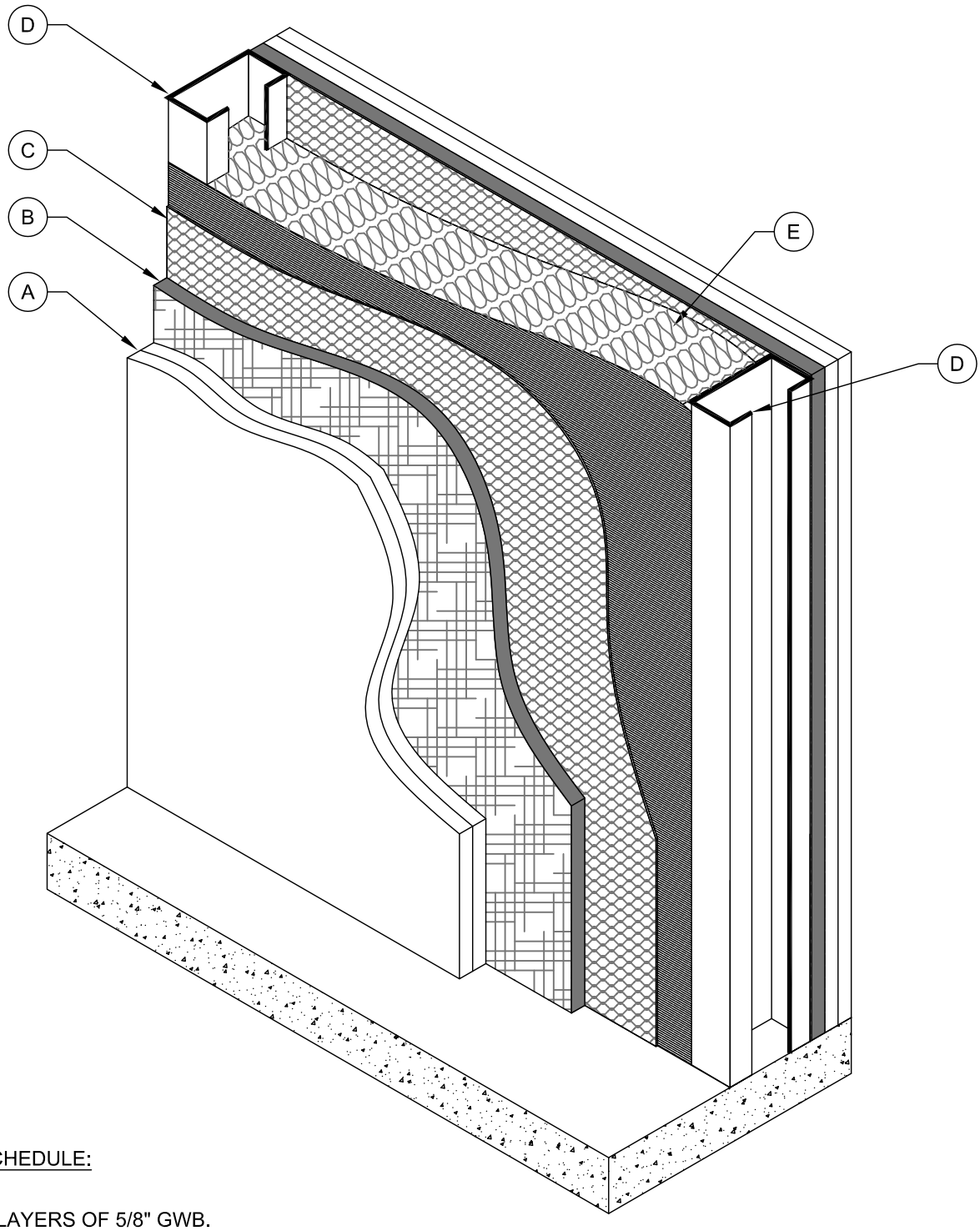

SCHEDULE:

A. 2 LAYERS OF 5/8" GWB.

B. 3/4" PLYWOOD.

C. #9 GAUGE EXPANDED MESH.

D. STEEL OR WOOD STUD.

E. BATT INSULATION.

PENETRATION RESISTANT WALL CONSTRUCTION DETAIL.

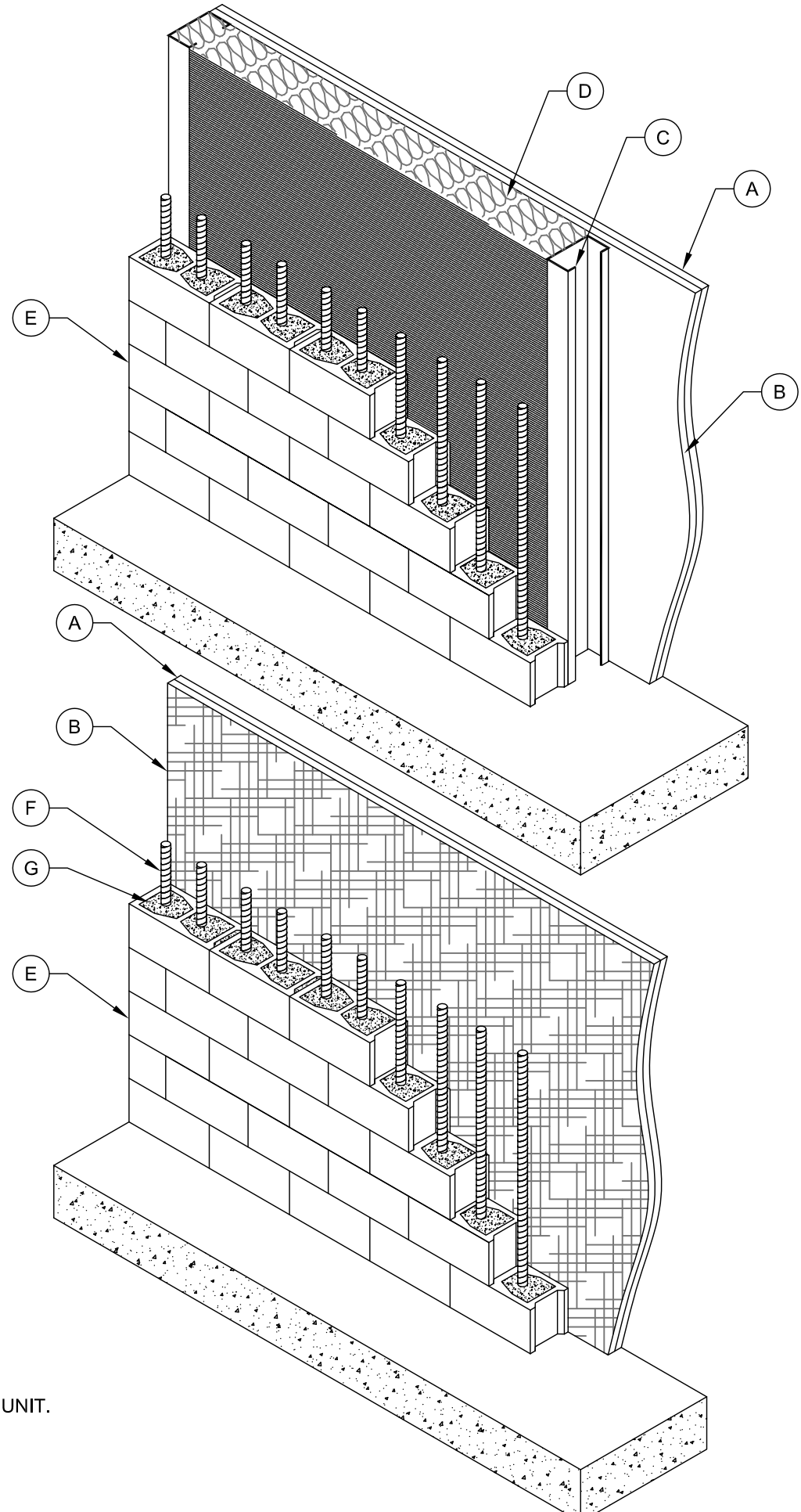

SCHEDULE:

A. 5/8" GWB.
B. 3/4" PLYWOOD.
C. STEEL OR WOOD STUD.
D. BATT INSULATION.
E. CONCRETE MASONARY UNIT.
F. STEEL BAR.
G. CONCRETE.

UL LISTED BULLET RESISTANT FIBERGLASS WALL CONSTRUCTION DETAIL.

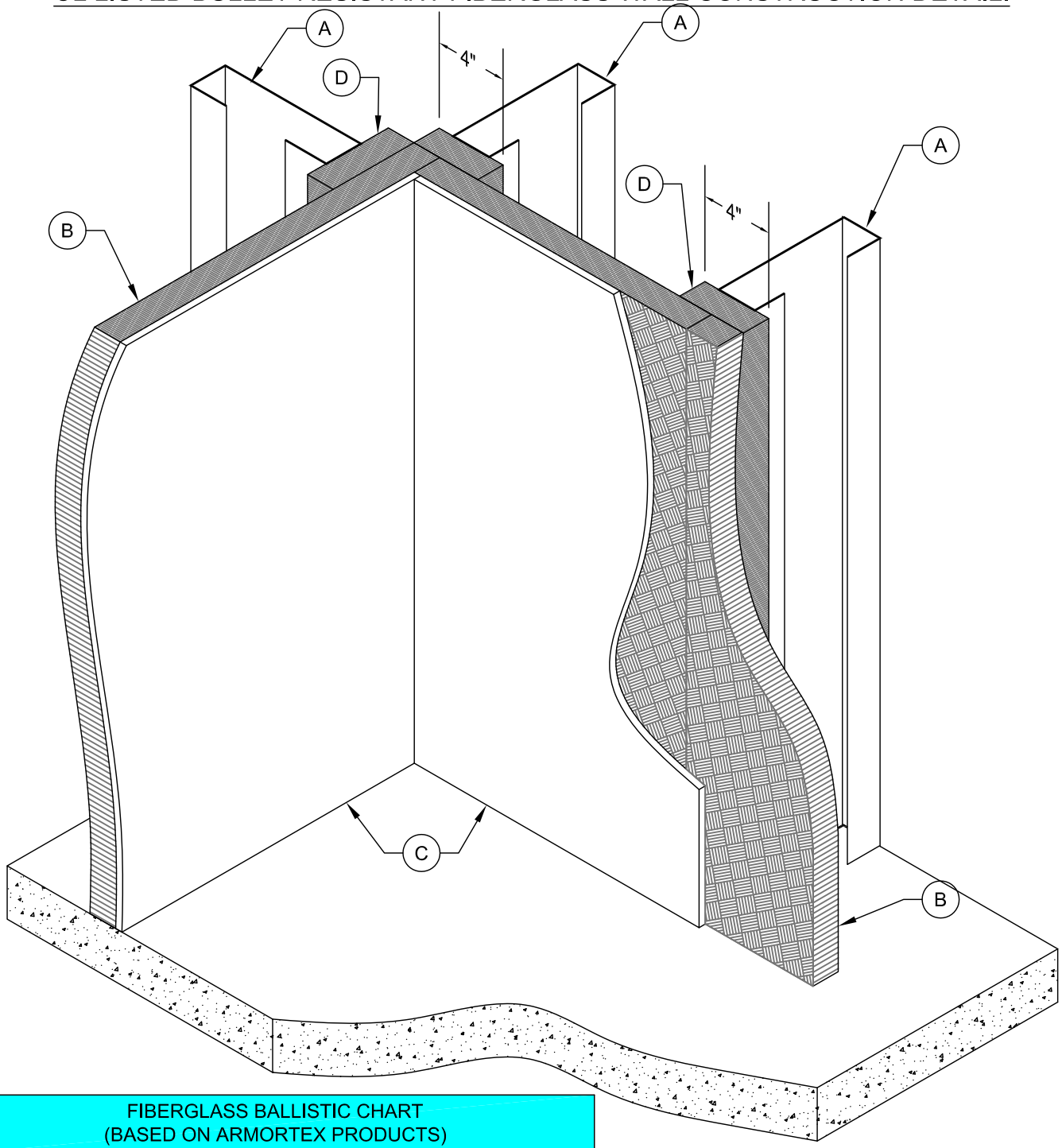

FIBERGLASS BALLISTIC CHART (BASED ON ARMORTEX PRODUCTS)		
FIBERGLASS PANEL THICKNESS	WEAPON	VELOCITY (FT./SEC.)
3/16	9 mm	1175 - 1295
5/16	.357 MAGNUM	1250 - 1375
7/16	.44 MAGNUM	1350 - 1485
1 3/16	.30 cal RIFLE	2540 - 2794
1 3/8	7.62 mm RIFLE	2750 - 3025
5/16	9 mm UZI	1400 - 1540
1 1/8	5.56 mm M-16	3080 - 3388
1 3/8	7.62 mm M-14	2750 - 3025

SCHEDULE:

A. STEEL OR WOOD STUD.

B. BULLET RESISTANT FIBERGLASS PANEL.

C. 5/8" GWB.

D. 4" BATTEN STRIP, CUT FROM FIBERGLASS FULL SHEET.

NOTES:

1. JOINTS BETWEEN FIBERGLASS PANELS MUST BE KEPT AS TIGHT AS POSSIBLE.

VII. Security Camera Pole

STRONGPOLES
THE SECURITY INDUSTRY STANDARD
Made in the USA

4” Square Poles Specifications

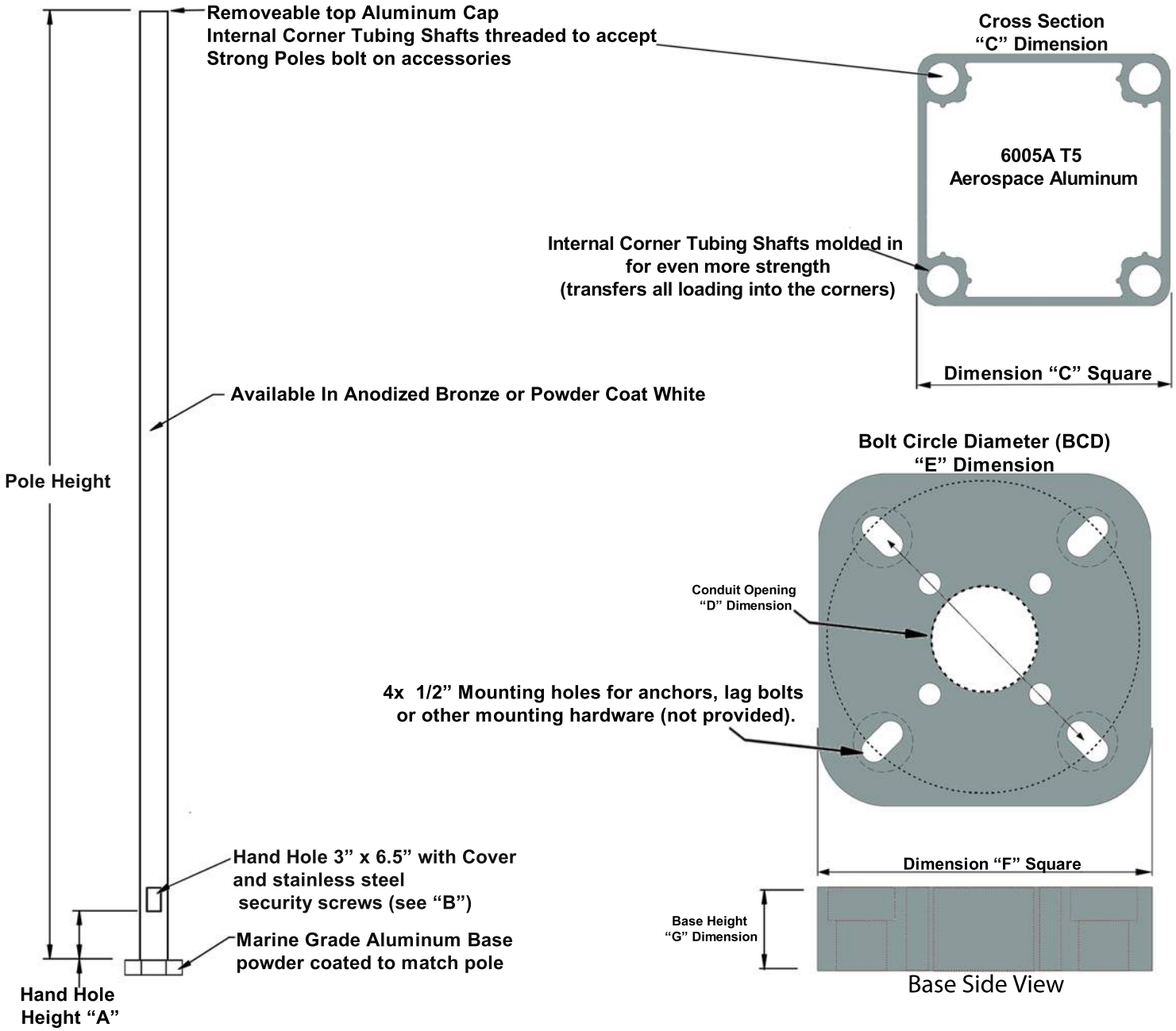

Part Number	Pole Height (in.)-(mm)	Pole Weight w/ base	A (in.)	B(in.)	C (in.)	D (in.)	E (in.)	F (in.)	G (in.)
SP-5	5' - (1.52m)	45lb	18	2" x 4.5"	4"	2.90"	8.50"	10.00"	2.5"
SP-8	8' - (2.43m)	60lb	18"	2" x 4.5"	4"	2.90"	8.50"	10.00"	2.5"
SP-12	12' - (3.65m)	75lb	18"	2" x 4.5"	4"	2.90"	8.50"	10.00"	2.5"

	DIA	Height	EPA Wind Velocity (MPH)				Weight	BCD
	inch	ft.	90	100	120	150	lbs	inch
SP-12	4.00"	12'	17.4	13.5	8.89	5.76	55	8.5"

www.strongpoles.com
844-669-3537

STRONGPOLES
THE SECURITY INDUSTRY STANDARD
Made in the USA

Foundation & Anchor Assembly Recomendations

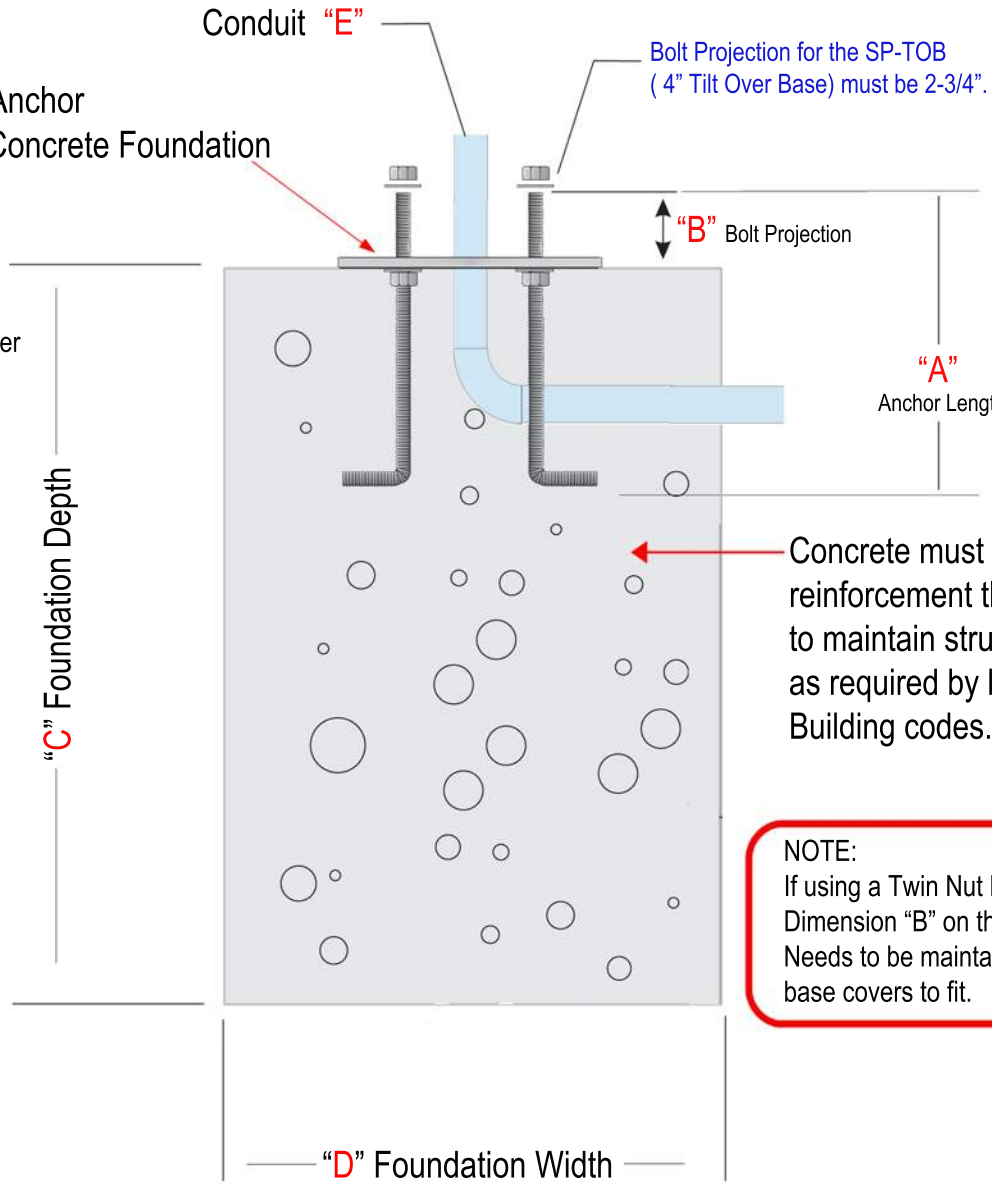

Consult Foundation Engineer with knowledge of local soil conditions also with State and Local building codes as applicable as to the proper foundation design and depth.

NOTE:
If using a Twin Nut Leveling System Dimension "B" on the Anchor Assembly Needs to be maintained to allow Pole base covers to fit.

Consult Foundation Engineer with knowledge of local soil conditions also with State and Local building codes as applicable as to the proper foundation design and depth.

Pole Size	StrongForms	Anchor Assembly Part #	"A"	"B" Bolt Projection	"C & D"	"E" Conduit Size	BCD
SteadyMax SP-SM16	StrongForm-18-5	Included	30"	2-3/4"	Consult Foundation Engineer	Maximum OD 4"	9.5"
SteadyMax SP-SM20	StrongForm-24-5	Included	36"	2-3/4"		Maximum OD 4"	11.5"
SteadyMax SP-SM25	StrongForm-30-6	Included	36"	2-3/4"		Maximum OD 4"	11.5"
4" Square Poles	StrongForm-18-5	SP-AB	18"	2-1/4" **		Maximum OD 3"	8.5"
	StrongForm-24-5						

** NOTE-Bolt Projection for the SP-TOB (4" Tilt Over Base) must be 2-3/4".

www.strongpoles.com
844-669-3537

APPENDIX III

ACOUSTIC PERFORMANCE
NARRATIVE

ACENTECH

33 Moulton Street
Cambridge MA 02138
617 499 8000
acentech.com

January 30, 2020

Regan Shields Ives, AIA, NCARB, LEED AP
Finegold Alexander Architects
77 North Washington Street
Boston, MA 02114
rshields-ives@faainc.com

Subject **SD Acoustics Narrative rev.1**
Leicester Middle School
Leicester, MA
Acentech Project No. 631361

Dear Regan:

We have reviewed your Schematic Design Phase floor plans for the Leicester Middle School project, which you emailed to us on 10/2/19. This Narrative summarizes our preliminary acoustical recommendations and design guidelines, which are intended to comply with the criteria for the LEED v4 "EQ Prerequisite Minimum Acoustic Performance." This revised narrative includes updated floor mark-ups for the modest updates since our 11/11/19 initial review.

Note that throughout this report, the term "classroom" includes all spaces that are considered by LEED to be "core learning spaces", including music and art rooms, OT/PT, ESL, SPED, media rooms, and any other space used for instruction.

ACOUSTICAL GOALS

The following LEED v4 goals are based mostly on the ANSI 12.60 standard for classroom acoustics (*Acoustical Performance Criteria, Design, Requirements and Guidelines for Schools)*. The goals are split into three categories: room acoustics/reverberation time, sound isolation, and background noise.

ROOM ACOUSTICS/REVERBERATION TIME (LEED V4 PREREQUISITE)

For core learning spaces with a volume up to 20,000 cubic feet, the LEED standard requires the following:

Option 1: For each room, confirm that the total surface area of acoustic wall panels, ceiling finishes, and other sound-absorbent finishes equals or exceeds the total ceiling area of the room (excluding lights, diffusers, and grilles). Materials must have an NRC (Noise Reduction Coefficient) of 0.70 or higher to be included in the calculation.

OR

Option 2: Confirm through calculations described in ANSI Standard S12.60 that rooms are designed to meet reverberation time requirements as specified in that standard and shown in Table 1 below (on page 2):

Table 1. Required reverberation times (RTs).

Learning Space	Maximum reverberation time for 500, 1000, and 2000 Hz (s)
Core learning space with enclosed volume (<10,000 ft^3)	0.6
Core learning space with enclosed volume (>10,000 ft^3 and ≤ 20,000 ft^3)	0.7

For core learning spaces with a volume equal or larger than 20,000 cubic feet, the LEED standard requires achieving reverberation times as described in the NRC-CNRC Construction Technology Update No. 51, Acoustical Design of Rooms for Speech (2002), and summarized in Figure 1 below.

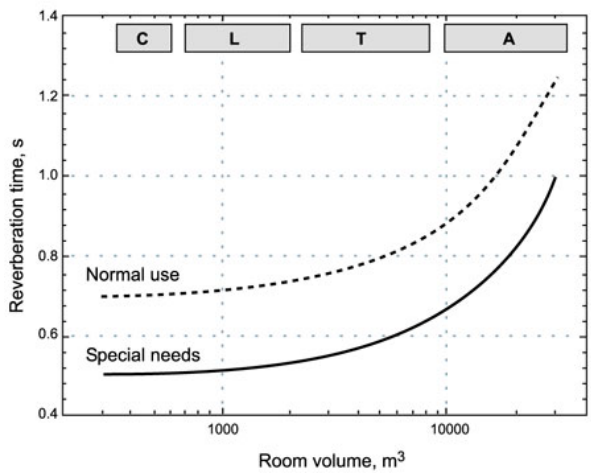

Figure 1. NRC-CNRC Construction Technology Update No. 51 requirement for reverberation times, where C = classrooms, L = lecture halls, T = theaters, and A = large auditoriums.

SOUND ISOLATION (LEED OPTIONAL CREDIT)

The sound isolation goals in Table 2 are not explicitly required by the LEED V4 prerequisite, and therefore, are not required for this project if you do not pursue the LEED Acoustic Performance Credit. However, the STC goals and associated wall and floor/ceiling constructions constitute acoustical "best practices" for all school projects, and therefore serve as the basis for Acentech's recommendations for the Leicester Middle School project.

Table 2. Sound isolation goals.

Core Learning Rooms Adjacent to…			
Other core learning space, health care room, outdoors	Toilet Room	Corridor, staircase, office, conference room not containing a door	Music room, mechanical room, cafeteria, gymnasium
STC 50	STC 53	STC 45	STC 60

In addition, we recommend STC 45 construction for demising walls in the administration areas. For more sound sensitive spaces, such as the principal's office or counseling rooms, we recommend upgrading the office demising walls to STC 50.

The floor-ceiling constructions of rooms located above core learning spaces should achieve an Impact Isolation Class (IIC) rating of minimum 45.

Exterior windows should achieve a rating of minimum STC 35. Interior glazing should be sized and selected so as not to degrade excessively the sound isolation performance of the surrounding wall construction. Where large windows are planned at interior walls, higher STC ratings may be necessary to achieve reasonable sound isolation goals – e.g. STC 40-45 at corridor walls (depending on the size of the window), and higher at demising constructions.

Background Noise Levels (LEED Prerequisite)

For the LEED prerequisite, the project is required to achieve a background noise level not exceeding 40 dBA in classrooms and other core learning spaces, as generated by building systems.

In addition, based on our experience, we propose the goals in Table 3 for certain spaces in the building:

Table 3. Background noise goals.

Space	Noise Goal	Approximate Equivalent Noise Criterion (NC)
Music Rooms, Cafetorium*	30 dBA	NC-25
Media Center, Classrooms & Core-Learning Spaces (*preferred*)	35 dBA	NC-30
Administration Areas, Classrooms & Core-Learning Spaces (*required*)	40 dBA	NC-35
Gymnasium	45 dBA	NC-40

*We recognize that for the "Cafetorium" (Dining and Stage areas), since it is both a performance space and dining facility, an NC-25 goal may not be practical. However, for performances involving children, this is a goal worth striving for.

Background Noise Levels (LEED Optional Credit)

For the LEED optional credit, the project is required to achieve a background noise level not exceeding 35 dBA in classrooms and other core learning spaces, as generated by building systems. This is not a requirement for the project should you not pursue the credit, although it is our recommended goal.

ACOUSTICAL RECOMMENDATIONS

1 – Room Acoustics

Typical Classrooms

(including Art, Flex Learning, SPED, ESL, Health, and Maker Spaces)

Plan for ACT (rated NRC 0.70 or higher) for the entire ceilings of typical classrooms. This should comply with the LEED-mandated RT goal and should control activity noise to a reasonable degree.

As discussed later in the report for sound isolation and mechanical noise control, you should select a mineral fiber ACT with a minimum CAC of 35, such as Armstrong *Ultima* (or similar), to improve sound isolation between vertical classrooms and to reduce mechanical equipment and ductwork breakout noise.

Media Center

Based on your current floor plans, the Media Center appears to be a double-height space. The recommended finishes are intended to control the build-up of noise and reverberation, in order to create a comfortable learning environment with a mid-frequency reverberation time goal of 0.7 seconds.

We recommend using an absorptive ceiling with minimum NRC 0.70, either by covering the entire ceiling area with ACT, or applying absorption directly to the deck, like spray-absorption or similar.

For the floor material, we recommend using a heavy carpet.

We also recommend installing wall panels on approximately 35% of the wall area (which is about 2,500 square feet), such as 1”-thick fabric-wrapped panels, with NRC 0.75 or higher, such as products by Kinetics, Armstrong, Tectum *Finale* or Decoustics.

Gymnasium

The recommended finishes are intended to control the build-up of noise and reverberation due to typical athletic uses.

Plan for an absorptive ceiling: either acoustical deck, which should be specified with a minimum NRC 0.90 rating, or spray-absorption like K-13 or similar.

We also recommend an approximately 10-foot tall band of sound absorptive panels on the entire length of one of the upper walls (at least 705 square feet total), such as Tectum Finale, with NRC 0.75 or higher.

Dining: Typical & Performance Use

Based on your current floor plans, Dining appears to be a double-height space. The recommended finishes are intended to control dining noise and to support performances.

The entire ceiling area should be covered with an absorptive ceiling, like ACT (rated at least NRC 0.70), or by another product with equivalent absorption.

We also recommend treating about 2,200 square feet of available wall area with 1”-thick fabric-wrapped panels, minimum NRC 0.75. The panels should be spread throughout the room, but with a particular concentration at the rear wall facing the Stage, as highlighted in our attached marked-up drawing

Listening conditions in typical “Cafetoriums” are usually compromised by poor audience sightlines (due to seats on flat floors), and the absence of wall and ceiling surfaces that are positioned and shaped to reflect sound from the stage to the audience. These acoustical shortcomings can be compensated for to a certain degree by adding sufficient sound absorbing finishes in Dining (as recommended in this Narrative), and, importantly, the design and installation of a high quality sound system. We also recommend sound-reflecting “eyebrow” canopies at the opening of the stage into the dining area, shown conceptually on the marked-up first floor plan. The panel should be tilted up about 10 degrees toward Dining, and it should be constructed of plywood or other sound-reflecting material.

Above the stage, we recommend a checkerboard of sound reflective and absorptive surfaces (e.g. mounted to the underside of the deck), to control reverberation and to enhance on-stage communication between performers. In addition, it may be necessary to add sound absorptive panels on the upper part of the stage walls.

Music Rooms

Based on the current floor plans, the three music rooms will be single-height spaces. We recommend treating the perimeter of the ceiling with sound absorptive acoustical panels (minimum NRC 0.70), surface mounted to the underside of the GWB barrier ceilings as indicated on the marked-up first floor plan, to control the build-up of noise. For the center of the ceiling, we recommend a checkerboard of sound absorptive and reflective surfaces to enhance communication between musicians. Depending on the design intent, this recommendation for the central portion of the ceiling could also take the form of sound reflective clouds, with sound absorption applied to the ceiling above the clouds. We also recommend highly treated walls in the three rooms, about 25% of the total wall area. In all music rooms, the finished ceiling system should be held as high as possible AFF.

2 – Sound Isolation

Walls

Please refer to the three attached marked-up floor plans for the recommended wall types that adhere to the STC goals in Table 2, above.

Notes on wall constructions:

1. Refer to Legends on the three marked-up floor plans.
2. All walls must extend and seal to the underside of the deck. The walls should be sealed at the top and bottom with a bead of acoustical caulk as described in the ASTM C919-02 standard.
3. Double stud walls should not be cross-braced or bear any rigid connection to each other. If bracing is needed for stability, use lateral bracing as described in UL design 493.
4. Electrical or tel/data outlets should not be installed back-to-back in the demising walls. They should be spaced at least one stud bay apart.
5. Any penetrations through walls by piping, ductwork or conduit should be sealed as shown in attached detail.
6. Wherever a sink or other water fixture is mounted on a demising wall with a sound sensitive room on the other side, the wall should be either a double stud construction with the piping connected to the sink side of the wall, or the piping should be supported on resilient clamps such as those by Trisolator or Holdrite.

Doors

Please refer to the attached marked-up floor plans for recommended door types and locations.

Typical classroom corridor doors: We recommend using solid core wood or fiberglass-stiffened hollow metal doors, with full perimeter gasket systems.

Typical classroom communicating doors: We recommend these doors be acoustically rated at least STC 40, installed in a field-built frame with full perimeter gaskets.

Doors at other sensitive and/or noisy spaces: Dining, administrative, and health spaces, as indicated on the marked-up drawings, should have doors and gaskets similar to classroom corridor doors.

Ensemble room doors (within Band Room): At this particularly sensitive adjacency, we recommend an acoustically-rated door, at least STC 45, installed in a field-built frame, with full perimeter gaskets.

Floor/Ceiling Constructions

The structure is 3-1/4” lightweight concrete slab over 3” composite metal deck. We expect that you will meet the sound isolation goals between vertical stacked classrooms with a full coverage wire-hung CAC 35 ceiling and a minimum 12” deep plenum.

Please refer to the attached marked-up floor plans for those rooms that will require GWB sound barrier ceilings (per attached detail) to comply with the STC 60 goal.

Flex Learning

Although these spaces are open to the corridor, if they are expected to be used as core learning spaces, you should plan for a visual barrier to the rest of the corridor as a minimum.

Dining

We want to flag the wall between the Stage and Dining and expect that it will be a visual operable partition only, without a need for robust sound isolation because the two spaces will not be used concurrently.

Windows

A 1-inch IGU system will achieve the STC 35 goal for exterior windows.

3 – Mechanical Systems Noise Control

This section summarizes the acoustical aspects of the project's HVAC system design and provides conceptual recommendations toward achieving the acoustical goals listed above. We can provide specific guidance during the following phases of design and construction if a supplemental proposal for consulting services is agreed upon, and as you advance and develop the mechanical design.

Rooftop Units

Select fans that operate as close to their rated peak efficiency as possible, when handling the required airflow and static pressure to serve the building.

Design duct connections at both fan inlet and outlet that allow for uniform and straight airflow. Ideally, there should be a straight duct that is minimum 5-duct diameters long beyond the connection to the equipment, prior to the first elbow or take-off. However, we recognize that this may not be possible if the equipment is located on the roof, and the duct drops into the building.

When using centrifugal fans, be sure to orient the fan rotation in the same direction as the first elbow from the fan discharge to avoid introducing excess turbulence when the rotational momentum of the airflow from the fan opposes the rotation of the first elbow (see Figure 2).

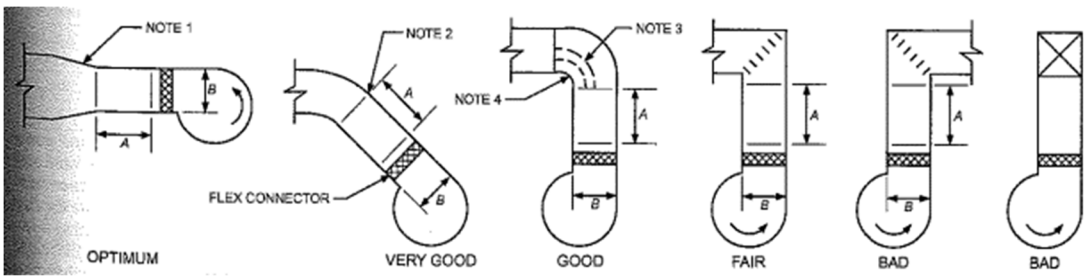

Figure 2. Fan rotation recommendations from ASHRAE Chapter 47.

Locate the rooftop units above spaces that are not sound sensitive, like Dining.

Reduce the roof penetration only to the penetrations by the supply and return duct, which will have to be sealed carefully after the installation of the ductwork.

Add sound attenuators in both the supply and return duct at the roof penetration to minimize the potential transmission of fan noise "breaking out" of un-attenuated ductwork. Elbow attenuators will likely be most appropriate at this location.

When possible, it is preferable to place the equipment on dunnage and extend the ductwork horizontally above the roof for several duct diameters before the ducts turn to penetrate into the building. This allows low frequency fan noise to dissipate to the environment without introducing this noise to interior of the building.

Depending on the location of the equipment relative to the occupied spaces, it may be necessary to either reinforce the roof construction over a given area and/or add sound barrier ceilings in the respective occupied spaces, to control radiated noise transmitting through the roof to these spaces.

Often, even if sound attenuators are used at the roof penetration, unwanted low frequency sound will still break out through the supply and return ducts immediately as they penetrate into the building. Depending on whether the ducts drop into the building above a sound-sensitive vs. non-sound-sensitive space, additional measures may be needed to control this sound, such as enclosing a section of duct in a gypsum board soffit, or lagging it directly with gypsum board.

Sound Attenuators for RTUs

Sound attenuators will be necessary in both the supply and return duct paths of the rooftop units. As described above, these attenuators should be located at the penetration through the roof.

Attenuators should be selected and located such that the pressure drop through the attenuator does not exceed 0.3 inches **including the system effects**. To achieve this goal, straight attenuators are expected to be located in a duct section that allows for smooth airflow velocities at the inlet and discharge of the attenuator. This involves striving for five duct diameters of long straight duct upstream and downstream of the

attenuator. If this condition is not available, allow at least three duct diameters of long straight duct upstream and downstream of the attenuator. If this is still unavailable, it may be prudent to select an elbow or a custom shaped attenuator instead; this can help to minimize the system effects, while providing predictable noise control.

Terminal Devices Serving the Occupied Spaces

At this early stage of design, it is not clear what type of system may be planned for. Rooms may be served by (1) VAV/FPB boxes or (2) induction units. Following are recommendations for each of these options. More specific recommendations will follow once we review the proposed design for the building.

1 – FPB/VAV Boxes

Terminal box noise is related to its fan (if the box is fan powered) and the pressure reducing valves. The noise transmits to the building via the following paths: (1) discharging downstream through the duct and the diffuser to the room served, (2) radiating from the exterior of the casing into the space where the box is located, and (3) transmitting through the return air inlet of the fan powered box. For each path, the following measures should be taken:

Path 1 – discharge noise:
For terminal boxes serving spaces with a maximum 40 dBA goal:

- Internally line at least 5 feet of duct downstream the terminal box; **or**
- Use the manufacturer's standard attenuation section without film or foil facing; **or**
- Use minimum 5 feet of flex duct (of the plastic covered wire helix type) at the diffuser connection.

For terminal boxes serving spaces with a maximum 35 dBA goal:

- Use a 3-ft. long silencer downstream of the terminal box (such as Vibro-Acoustics RD-MV-"medium F #"), with a maximum pressure drop of 0.06 inches; **or**
- Use the manufacturer standard attenuation section without film or foil facing **plus** 5 feet of internal lining or flex duct (of the plastic covered wire helix type); **or**
- Internally line about 5 feet of duct downstream the terminal box **and** use minimum 5 feet of flex duct at the diffuser connection.

For terminal boxes serving spaces with a maximum 30 dBA goal, we can provide specific noise-control recommendations based on the duct layout.

Paths 2 and 3 – radiated and inlet sound:
All terminal boxes should be located above corridors or other non-sensitive spaces, and **not** above teaching spaces. Above corridors, the boxes should be located at a minimum above a **mineral fiber** acoustical ceiling tile (ACT) with a minimum CAC of 35. If there is no drop ceiling available, the boxes will likely have to be enclosed in GWB constructions (see detail attached).

2 – Induction Units

These are alternative options to the traditional VAV box systems, used more extensively in schools during the past few years. These systems include equipment such as the induction units by NuClimate or the *Multi-Zone* indoor split systems by Mitsubishi.

Such equipment should be selected with a noise rating no higher than 35 dBA. To allow for this rating, equipment typically has to operate with an inlet static pressure no higher than 0.6 inches of water, and/or on low or medium speeds only.

Airflow Velocities through Ducts

Airflow velocities in supply and return systems serving acoustically sensitive spaces need to be suitably low to prevent the generation of excessive air turbulence noise in ducts. To this end, we have included a table below of our recommended airflow velocity guidelines for unlined ducts (see Table 4). For lined ducts, the velocities can be up to 20% higher than those listed in Table 4. For return ducts, velocities can be up to 10% higher than listed below. Ductwork should be sized to meet the guideline velocities based on the noise goal of the space served and the position within the duct run.

Table 4. Airflow velocity guidelines for unlined ducts.

Location in supply duct	Maximum airflow velocities (FPM) by room noise goal (dBA)		
	30 dBA	35 dBA	40 dBA
Terminal device (½" min. slot width)	350	425	500
Individual duct runouts/branches	375	450	550
Upstream of junction, up to 15 feet	480	560	680
Upstream of elbow/junction, up to 15 feet	600	700	850

For the 45 dBA spaces, you may design as needed for best practice mechanical design, which is often 0.08" w.g./100 ft. The goals for the diffuser airflow velocities may be somewhat increased if induction units are used; these velocities will depend on the manufacturer specifications.

Duct Layouts and Volume Dampers

While elbows conceptually help attenuate sound through the ductwork, the air turbulence resulting from having multiple elbows located very close to each other generates noise. Whenever possible, locate elbows or branch takeoffs at least 4 to 5 duct diameters away from each other.

As much as possible, we recommend planning for a self-balanced air distribution duct system that eliminates the need for dampers. Self-balanced systems consist of ductwork layouts that have inherently balanced designs by using similar pressure drop characteristics to equalize pressure to each diffuser of the branched system. If a self-balanced, damper free layout is not possible, the following measures are necessary in order to control the noise contribution from these system elements to the occupied spaces:

- Do not use diffusers with opposed blade dampers.
- For spaces with a noise goal of maximum 35 dBA: locate dampers minimum 6 to 8 feet away from the diffuser. Internally line the duct downstream of the damper, or use a combination of internally lined and plastic coated wire helix flexible duct.

Duct Lining

The internal duct lining should be specified with a Noise Reduction Coefficient (NRC) of minimum 0.70. In order to achieve this goal, closed cell foam lining or lining with any type of film or foil facing are not acceptable. We recommend a glass fiber product similar *Permacote Linacoustic* by Johns Manville.

Room Air Devices (Diffusers, Registers and Grilles)

The selection of these devices should be made with an NC rating that is at least 5 dB lower than the recommended NC goal for the space. When several diffusers or grilles are located in close proximity of each other, the NC selection should be 7 to 10 points below the NC goal for the space. (Since the goals for the project are expressed as "dBA", assume that the NC equivalent is about 5 points lower than the stated dBA value; e.g. 40 dBA equals NC-35, and RGDs for such a space should be selected at NC-28 or lower.)

Vibration Isolation

Mechanical systems have to be installed on vibration isolation systems to prevent excessive structure-borne noise from transmitting to the occupied spaces. For general information, we have attached our guidelines for vibration isolation of mechanical systems.

Community Noise

The project should comply with the MA-DEP noise guideline (301 CMR 7.10). The guideline states that noise from new equipment should not exceed by 10 dB or more the existing noise levels at the property line and at any inhabited nearby residence, and that the noise should not be tonal.

We will perform a multiple day noise survey following our delivery of this report, if authorized. We are not aware of a specific noise ordinance for the Town of Leicester.

* * * * *

Please let us know if you have any questions or concerns about this acoustics report. I can be reached at 617-499-8061, or by email at kzaman@acentech.com.

Sincerely,

Khaleela Zaman
Consultant

CC: Nicole Cuff, Ben Markham (Acentech)

Enclosure: Marked-up plans (floors 1 through 3)
Sound barrier ceiling detail
Penetration detail
Terminal box enclosure
Vibration isolation specification

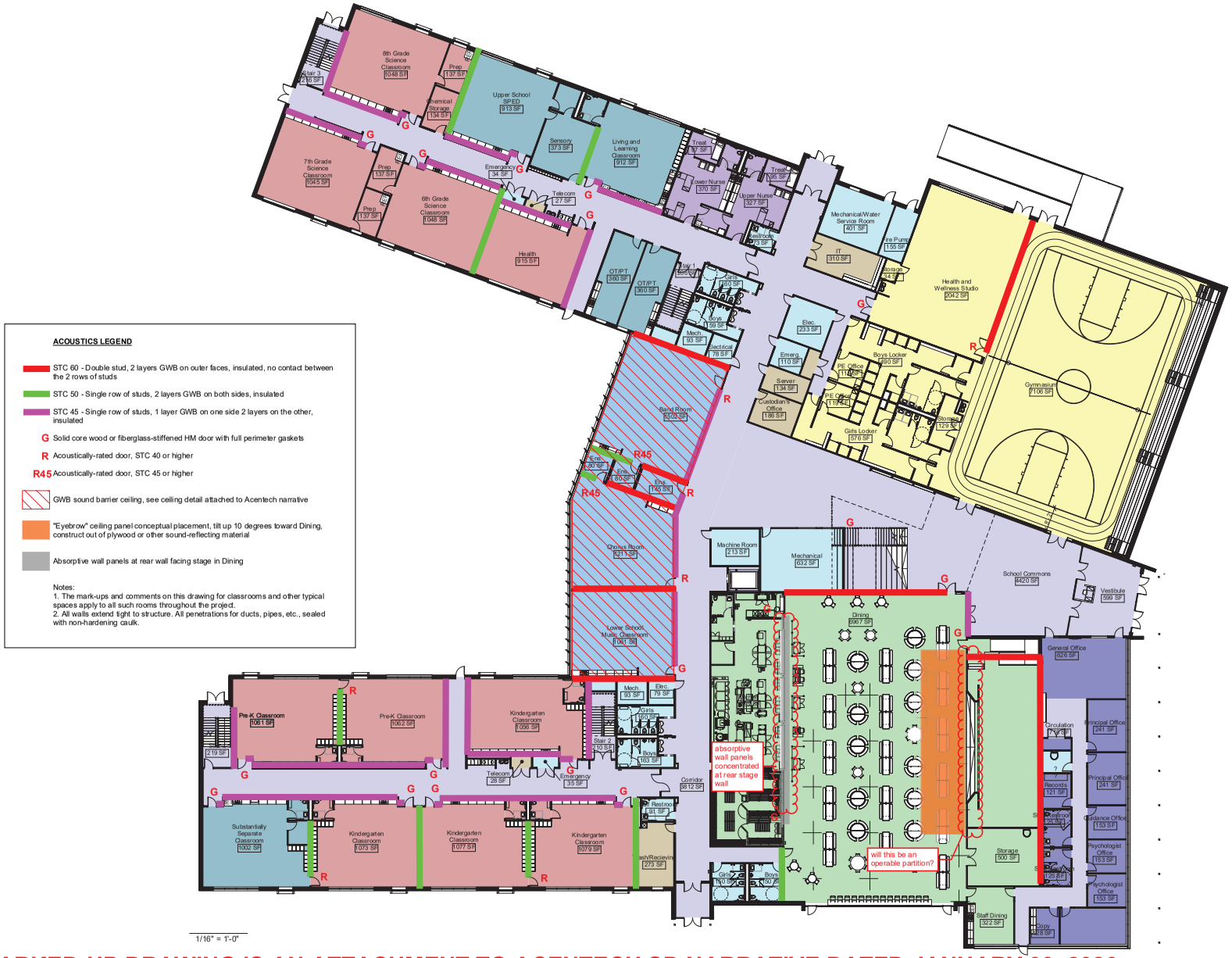

THIS MARKED-UP DRAWING IS AN ATTACHMENT TO ACENTECH SD NARRATIVE DATED JANUARY 30, 2020

First Floor

Leicester Middle School

70 Winslow Ave.
Leicester, MA 01524

Finegold Alexander Architects Inc

01/27/2020

THIS MARKED-UP DRAWING IS AN ATTACHMENT TO ACENTECH SD NARRATIVE DATED JANUARY 30, 2020

Second Floor

Leicester Middle School

70 Winslow Ave.
Leicester, MA 01524

Finegold Alexander Architects Inc

10/17/19

THIS MARKED-UP DRAWING IS AN ATTACHMENT TO ACENTECH SD NARRATIVE DATED JANUARY 30, 2020

Third Floor

Leicester Middle School
70 Winslow Ave.
Leicester, MA 01524

Finegold Alexander Architects Inc
10/17/19

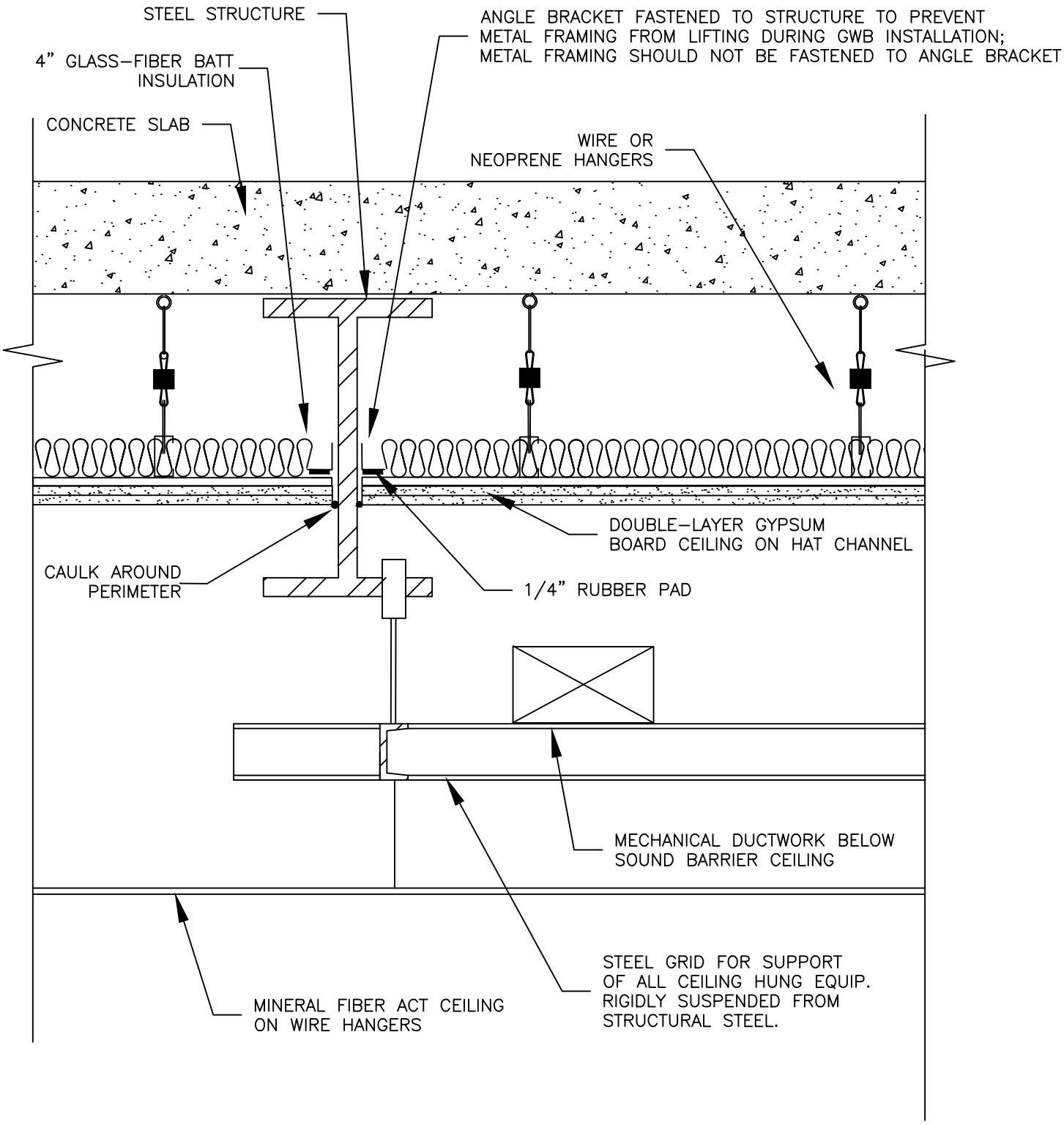

NOTES:
1. INSTALL STEEL FRAMING ROUGHLY 3 TO 4 INCHES ABOVE THE BOTTOM I-BEAM CHORD TO ALLOW ROOM FOR CAULKING AND I-BEAM HANGERS.
2. HANG ALL EQUIPMENT FROM BOTTOM CHORD OF I-BEAM OR FROM STEEL STRUCTURE. DO NOT PENETRATE THE GYPSUM BOARD CEILING.

ACENTECH
33 MOULTON STREET
CAMBRIDGE, MA 02138
VOICE: 617 499 8000

PROJECT NO:	
DWG DATE:	1/2/18
SCALE:	N.T.S.
FILE NAME:	GWBIBEAM.dwg
DRAWN:	RJC

GYPSUM BOARD CEILING (RESILIENTLY SUSPENDED)

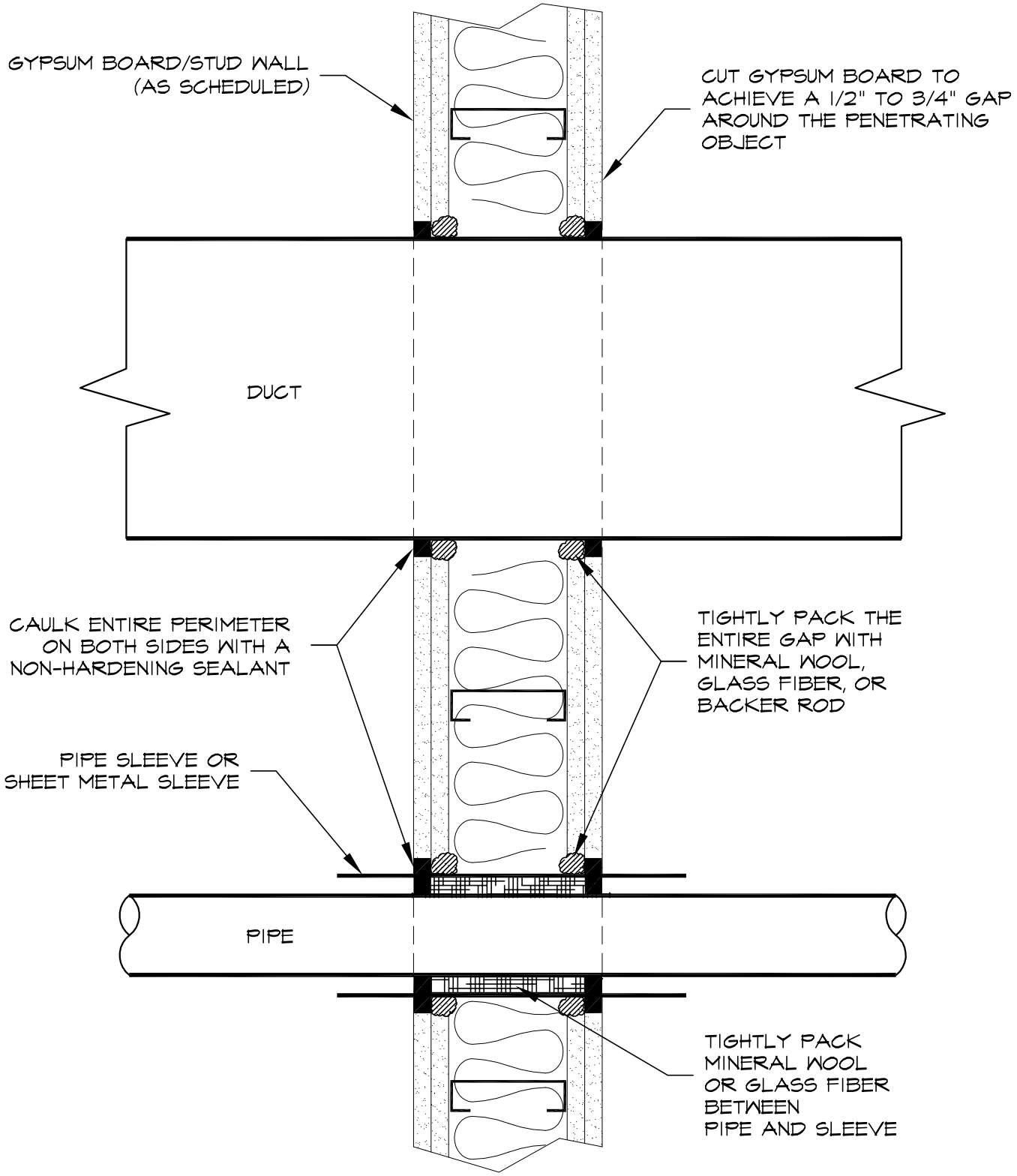

Acentech

33 MOULTON STREET
CAMBRIDGE, MA 02138-1118
VOICE: (617) 499-8000
FAX: (617) 499-8074

PROJECT NO:	
DWG DATE:	03/19/08
SCALE:	N.T.S.
FILE NAME:	PENEGWB.DWG
DRAWN:	RSB/RMS

PENETRATION DETAILS
(IN GWB PARTITION)

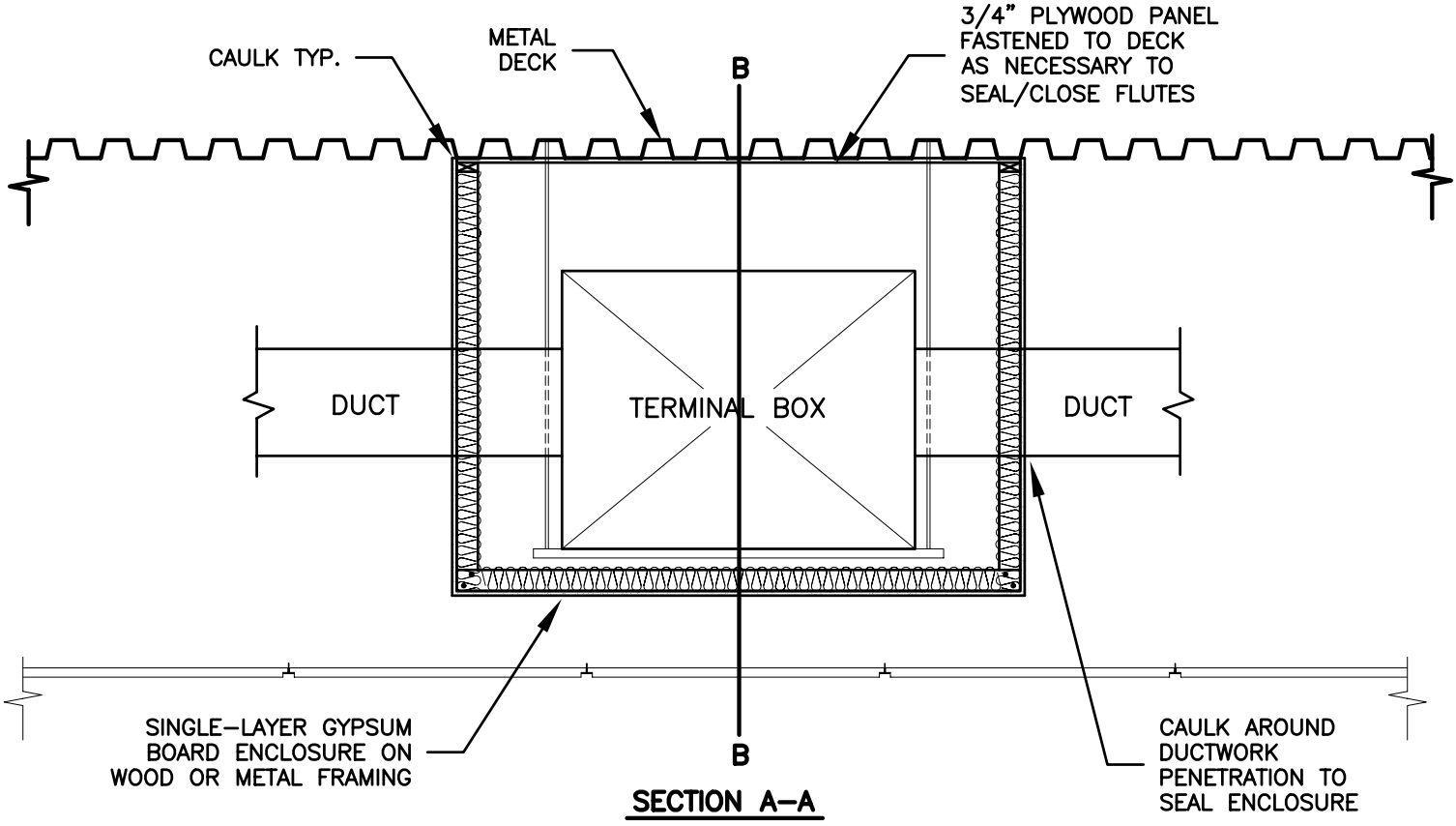

SECTION A–A

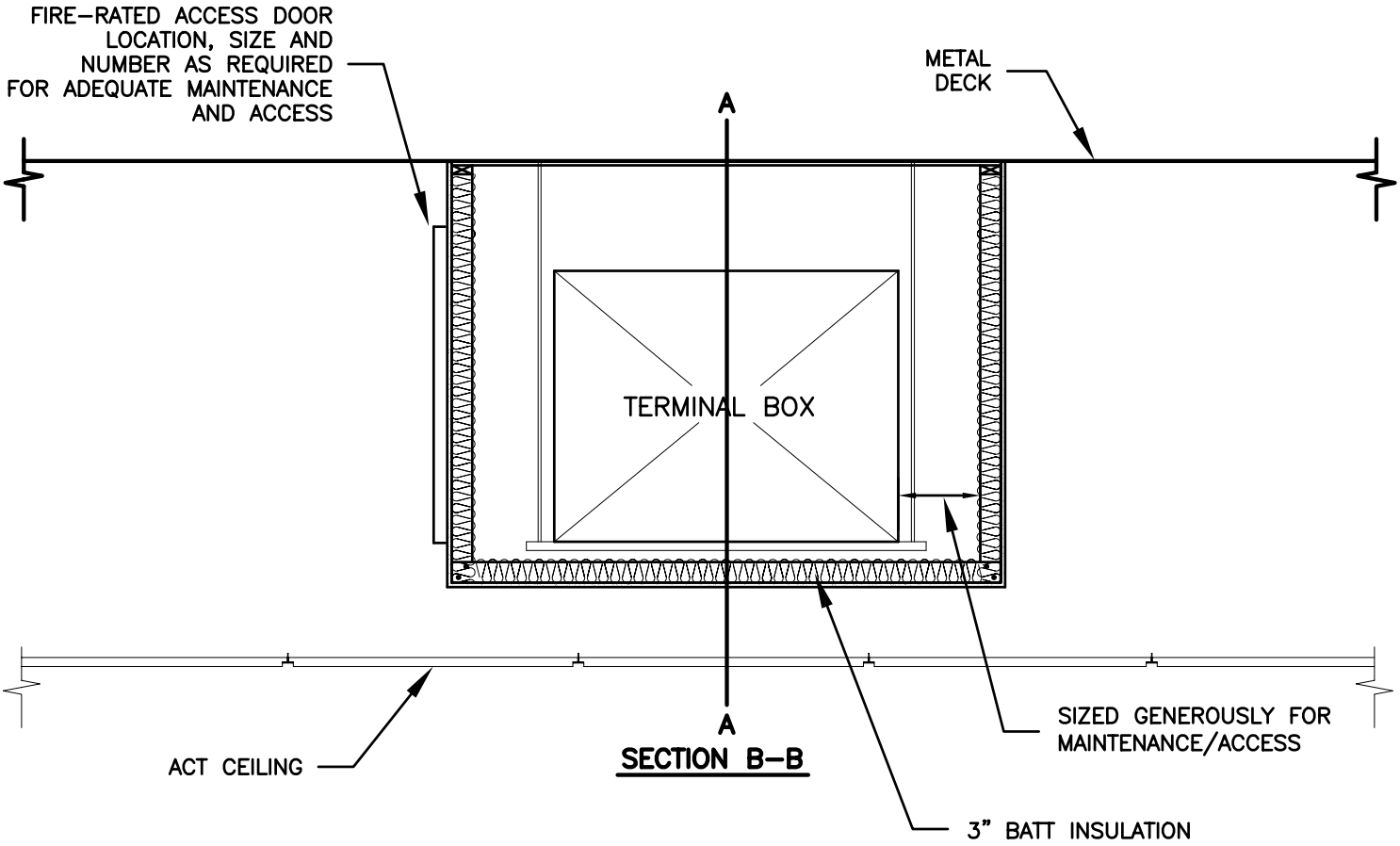

SECTION B–B

Acentech

33 MOULTON STREET
CAMBRIDGE, MA 02138-1118
VOICE: (617) 499-8000
FAX: (617) 499-8074

PROJECT NO:	
DWG DATE:	11/9/01
SCALE:	N.T.S.
FILE NAME:	TBENCL.DWG
DRAWN:	JLF/JC/DHS

TERMINAL BOX ENCLOSURE

GUIDE SPECIFICATION
FOR
VIBRATION ISOLATION OF MECHANICAL SYSTEMS

1. GENERAL

1.1 DESCRIPTION

Furnish and install vibration control devices, materials, and related items. Perform all work as shown on the drawings and as specified herein to provide complete vibration isolation systems in proper working order.

1.2 REQUESTS FOR CHANGE

Any requests for changes to the specifications must be submitted in writing at least ten days prior to bid closing. Approval will be given through a written addendum.

1.3 QUALITY ASSURANCE

A. Coordinate the size, location, and special requirements of vibration isolation equipment and systems with other trades. Coordinate plan dimensions with size of housekeeping pads.

B. Provide vibration isolators of the appropriate sizes, with the proper loading to meet the specified deflection requirements.

C. Supply and install any incidental materials such as mounting brackets, attachments and other accessories as may be needed to meet the requirements stated herein, even if not expressly specified or shown on the drawings, without claim for additional payment.

D. Verify correctness of equipment model numbers and conformance of each component with manufacturer's specifications.

E. Should any rotating equipment cause excessive noise or vibration when properly installed on the specified isolators, the Contractor shall be responsible for rebalancing, realignment, or other remedial work required to reduce noise and vibration levels. Excessive is defined as exceeding the manufacturer's specifications for the unit in question.

F. Upon completion of the work, the Architect or Architect's representative shall inspect the installation and shall inform the installing contractor of any further work that must be completed. Make all adjustments as directed by the Architect that result from the final inspection. This work shall be done before vibration isolation systems are accepted.

1.4 SUBMITTALS

A. Refer to related sections elsewhere for procedural instructions for submittals.

B. Before ordering any products, submit shop drawings of the items listed below. The shop drawings must be complete when submitted and must be presented in a clear, easily understood form. Incomplete or unclear presentation of shop drawings may be reason for rejection.

1. A complete description of products to be supplied, including product data, dimensions, specifications, and installation instructions.

2. Detailed selection data for each vibration isolator supporting equipment, including:

The equipment identification mark;

The isolator type;

The actual load;

The static deflection expected under the actual load;

The specified minimum static deflection.

3. Steel rails, steel base frames, and concrete inertia bases showing all steel work, reinforcing, vibration isolator mounting attachment method, and location of equipment attachment bolts.

4. Special details necessary to convey complete understanding of the work to be performed.

C. Submission of samples may be requested for each type of vibration isolation device. After approval, samples will be returned for installation at the job if requested. All costs associated with submission of samples shall be borne by the Contractor.

1.5 DESIGN REQUIREMENTS

A. Design isolators for equipment installed outdoors to provide adequate restraint to withstand wind load of the applicable building code applied to any exposed surface of the isolated equipment. Isolators for outdoor equipment shall have bolt holes for attachment to equipment and to supports. The vibration isolation Vendor shall submit verifying shear and over turning calculations, for their product and equipment installation arrangement, stamped by a licensed Professional Engineer. The design and supply of miscellaneous support steel above and below isolators will not be the responsibility of the vibration isolation manufacturer.

1.6 SEISMIC RESTRAINT

A. Seismic restraint shall be a separate requirement. However seismic restraint may be integrated with the isolators if desired by the contractor. It shall be acceptable to use alternate isolators that are fundamentally similar in their vibration isolation performance to the products specified herein except with seismic restraint features and it is not necessary to submit such devices for advanced approval.

B. Seismic restraint, whether integrated with the isolators or separate devices must be installed in such a way to not diminish the isolation of the isolation mounting.

2. PRODUCTS

2.1 GENERAL

A. All metal parts installed out-of-doors shall be corrosion resistant after fabrication. Galvanizing shall meet ASTM Salt Spray Test Standards and Federal Test Standard No. 14.

B. Isolators installed out-of-doors shall have base plates with bolt holes for fastening the isolators to the support members.

C. Isolator types are scheduled to establish minimum standards. At the Contractor's option, labor-saving accessories can be an integral part of isolators supplied to provide initial lift of equipment to operating height, hold piping at fixed elevations during installation and initial system filling operations, and similar installation advantages. Accessories and seismic restraint features must not degrade the isolation performance of the isolators.

D. Static deflection of isolators shall be as provided in the EXECUTION section and as shown on the drawings. All static deflections stated are the minimum acceptable deflection for the mounts under actual load. Isolators selected solely on the basis of rated deflections are not acceptable and will be disapproved.

E. Spring elements in isolators shall be freestanding and laterally stable without any housing. Spring diameter shall be not less than 0.8 of the compressed height of the spring at the rated load. Springs shall have a minimum additional travel-to-solid equal to 50% of the rated deflection. Springs shall be designed so that the ratio of horizontal stiffness to vertical stiffness is approximately 1.

F. Housed isolators are unacceptable.

2.2 MATERIAL AND EQUIPMENT

A. Vibration isolation mounts shall be supplied by one of the following approved manufacturers:

Novia Associates (Salem, NH)..... N.A.I.
Mason Industries, Inc. (Hauppauge, NY)..... M.I.
Kinetics Noise Control, Inc. (Dublin, OH)..... K.N.C.
Vibration Eliminator Co., Inc. (Long Island City, NY)..... V.E.
Vibration Mountings & Controls, Inc. (Butler, NJ) .....V.M.&C.

B. Unless otherwise specified, supply only new equipment, parts and materials.

C. Substitutions of equal equipment beyond the alternatives listed will be permitted only with the written permission of the Architect. Accompany each request for acceptance of substitute equipment with manufacturer's certified data proving the equivalence of the proposed substitute in quality and performance. The Architect shall be the final judge of the validity of the data submitted.

D. Unless otherwise approved by the Architect, field-installed vibration isolation equipment shall be furnished by a single manufacturer or his authorized representative, who shall also be responsible for all work specified in this section to be performed by the manufacturer.

2.3 VIBRATION ISOLATOR TYPES

A. Type FSN (Floor Spring and Neoprene)

FSN isolators shall include a spring element that has attachment bolts and leveling assemblies.

The spring element in the isolator shall be set in a neoprene cup and have a steel washer or a flat surface in contact with the neoprene to distribute the load evenly over the bearing surface of the neoprene. Alternatively, each isolator shall be mounted on a Type NP isolator. If the NP isolator is used, a rectangular bearing plate of appropriate size shall be provided to load the pad uniformly within the manufacturer's recommended range. If the isolator is to be fastened to the building and the NP isolator is used, the holes in the isolator base plate shall be oversized and GROMMETS shall be provided for each base plate bolt hole.

If the basic spring isolator has a neoprene friction pad on its base and an NP isolator is to be added to the base, a galvanized steel, stainless steel or aluminum bearing plate shall be used between the friction pad and the NP isolator. If the isolator is outdoors, bearing plates shall not be made of galvanized steel. The NP isolator, bearing plate and friction pad shall be permanently adhered to one another and to the bottom of the isolator base plate.

Type FSN isolators shall be one of the following products with the appropriate neoprene pad (if used) selected from Type NP or approved equal:

Type SM ..... N.A.I.
Type SLF ..... M.I.
Type FDS ..... K.N.C.
Type OST ..... V.E.
Series AC ..... V.M.&C.

B. Type FSNTL (Floor Spring and Neoprene Travel Limited)

FSNTL isolators shall have a spring element within a travel limiting assembly. The spring shall have internal adjustment mechanisms to transfer the load to the spring. Travel limit assemblies shall to limit vertical isolator extension when weight is removed. The travel limit assembly shall be capable of serving as blocking during erection of the equipment so that the installed and operating height of the isolators are the same. A minimum clearance of ¼” shall be maintained around restraining bolts and between the limit stops and the spring to avoid interference with the spring action and to limit horizontal motion on the isolation system to ¼”.

The spring element in the isolator shall be set in a neoprene cup and have a steel washer or a flat surface in contact with the neoprene to distribute the load evenly over the bearing surface of the neoprene. Alternatively, each isolator shall be mounted on a Type NP isolator. If the NP isolator is used, a rectangular bearing plate of appropriate size shall be provided to load the pad uniformly within the manufacturer's recommended range. If the isolator is to be fastened to the building and the NP isolator is used, the holes in the isolator base plate shall be oversized and GROMMETS shall be provided for each base plate bolt hole.

If the basic spring isolator has a neoprene friction pad on its base and an NP isolator is to be added to the base, a galvanized steel, stainless steel or aluminum bearing plate shall be used between the friction pad and the NP isolator. If the isolator is outdoors, bearing plates shall not be made of galvanized steel. The NP isolator, bearing plate and friction pad shall be permanently adhered to one another and to the bottom of the isolator base plate.

Type FSNTL isolators shall be one of the following products, with the appropriate neoprene pad (if used) selected from Type NP or approved equal:

Type RSM ..... N.A.I.
Type SLR ..... M.I.
Type FLS..... K.N.C.
Type KW ..... V.E.
Series AWR.....V.M.&C.

C. Type FN (Floor Neoprene)

NP isolators shall be neoprene-in-shear type with steel reinforced top and base. All metal surfaces shall be covered with neoprene. The top and bottom surfaces shall be ribbed. Bolt holes shall be provided in the base and the top shall have a threaded fastener. The mounts shall include leveling bolts that may be rigidly connected to the equipment.

Type FN isolators shall be one of the following products or approved equal:

Type FMD ..... N.A.I.
Type ND ..... M.I.
Type RD ..... K.N.C.
Type D44..... V.E.
Series RD.....V.M.&C.

D. Type FNR (Floor Neoprene Restrained)

FNR isolators shall incorporate bridge-bearing neoprene elements with all-directional restraint. The mount shall consist of a ductile iron casting containing two separated and opposing molded neoprene elements. The elements shall prevent the central threaded sleeve and attachment bolt from contacting the casting during normal operation. Bolt holes shall be provided in the base and the top shall have a threaded fastener.

Type FNR isolators shall be one of the following products or approved equal:

Type RNM ..... N.A.I.
Type BR ..... M.I.
Series RSM .....V.M.&C.

E. Type PCF (Precompressed Fiberglass)

PCF isolator blocks shall be made of molded inorganic glass fiber that is individually coated and sealed with an impervious elastomeric membrane. Fiberglass shall be severely overloaded during the manufacturing process to stabilize the material into a product that is permanent and has consistent, predictable dynamic properties.

Type PCF isolators shall be one of the following products or approved equal.

Type KIP ..... K.N.C.

F. Type NP (Neoprene Pad)

NP isolators shall be one layer of 5/16" to 3/8" thick ribbed or waffled neoprene. The pads shall be sized so that they will be loaded within the manufacturer's recommended range.

Type NP isolators shall be one of the following products or approved equal:

Type NPW-516..... N.A.I.
Type W ..... M.I.
Type NPS..... K.N.C.
Type 200N..... V.E.
Series Maxi-Flex .....V.M.&C.

G. Type DNP (Double Neoprene Pad)

DNP isolators shall be formed by two layers of ¼" to ⅜" thick ribbed or waffled neoprene, separated by a galvanized steel (except for outdoor applications), stainless steel or aluminum plate. These layers shall be permanently adhered together. The pads shall be sized so that they will be loaded within the manufacturer's recommended range.

Type DNP isolators shall be formed from one of the following products or approved equal:

Type NPW-516-2S ..... N.A.I.
Type WSW ..... M.I.
Type NPS ..... K.N.C.
Type 200N (Multilayers) ..... V.E.
Series Maxi-Flex ..... V.M.&C.

H. Type HSN (Hanger Spring and Neoprene)

HSN isolators shall consist of a freestanding and laterally stable steel spring and a neoprene element in series, contained within a steel bracket. Spring diameters and hanger housing lower hole sizes shall be large enough to permit the hanger rod to swing through a 30° arc before contacting the housing. Alternatively, other provisions shall be made to allow for a 30° arc of movement of the bottom hanger rod without contacting the isolator bracket. The neoprene element shall be designed to have a 0.3" minimum static deflection. The deflection of both the spring element and the neoprene element shall be included in determining the overall deflection of Type HSN isolators.

A precompressed glass fiber element may be substituted for the neoprene element.

Type HSN isolators shall be one of the following products or approved equal:

Type SNH ..... N.A.I.
Type 30N ..... M.I.
Type SRH or SFH ..... K.N.C.
Type SNRC ..... V.E.
Type RSH 30A or RSHSC ..... V.M.&C.

I. Type HN (Hanger Neoprene)

HN isolators shall consist of a neoprene-in-shear element contained within a steel housing. A neoprene neck bushing shall be provided where the hanger rod passes through the hanger housing to prevent the rod from contacting the hanger housing.

A precompressed glass fiber element may be substituted for the neoprene element.

Type HN isolators shall be one of the following products or approved equal:

Type NH ..... N.A.I.
Type HD ..... M.I.
Type RH or FH ..... K.N.C.
Type 3C ..... V.E.
Type RHD ..... V.M.&C.

2.4 EQUIPMENT BASES

A. Type BSR (Base - Steel Rail)

Steel rail bases shall consist of structural steel sections sized to provide a rigid beam that will not twist, deform, or deflect in any manner that will negatively affect the supported equipment or the vibration isolation mounts. Rail bases shall include mounting brackets for attachment of vibration isolators.

Type BSR bases shall be one of the following products or approved equal:

Type SB ..... N.A.I.
Type R or ICS ..... M.I.
Type KRB or KFB ..... K.N.C.
Type CS ..... V.E.
Type WFR ..... V.M.&C.

B. Type BSF (Base - Steel Frame)

Steel frame bases shall consist of structural steel sections sized, spaced, and connected to form a rigid base which will not twist, rack, deform, or deflect in any manner which will negatively affect the supported equipment or the vibration isolation mounts. Frames shall be adequately sized to support basic equipment units and motors plus any associated pipe elbow supports, duct elbow supports, electrical control elements, or other components closely related and requiring resilient support in order to prevent vibration transfer to the building structure. The depth of steel frame bases shall be at least 1/10 the longest dimension of the base supported between isolators and not less than 6". The base footprint shall be large enough to provide stability for supported equipment.

Frame bases shall include side mounting brackets for attachment to vibration isolators. Mounting brackets shall be located on the sides of the base that are parallel to the axis of rotation of the supported equipment.

Type BSF bases shall be one of the following products or approved equal:

Type SB ..... N.A.I.
Type WFSL ..... M.I.
Type SFB ..... K.N.C.
Type HB ..... V.E.
Series WFB ..... V.M.&C.

C. Type BIB (Base - Inertia Base)

Inertia bases shall be formed of stone-aggregate concrete (150 lb./cu.ft.) and appropriate steel reinforcing cast between welded or bolted perimeter structural steel channels. Inertia bases shall be built to form a rigid base that will not twist, rack, deform, deflect, or crack in any manner that would negatively affect the supported equipment or the vibration isolation mounts. Inertia bases shall be adequately sized to support basic equipment units and motors plus any associated pipe elbow supports, duct elbow supports, electrical control elements, or other components closely related and requiring resilient support in order to prevent vibration transfer to the building structure. Inertia base depth shall be at least 1/12 the longest dimension of the base supported between isolators and not less than 6". The base footprint shall be large enough to provide stability for supported equipment. Inertia bases shall include side mounting brackets for attachment to vibration isolators. Mounting brackets shall be located on the sides of the base that are parallel to the axis of rotation of the supported equipment. Concrete may be provided by the General Contractor.

Frame and reinforcement for Type BIB bases shall be one of the following products or approved equal:

Type CIB ..... N.A.I.
Type KSL or BMK ..... M.I.
Type CIB-L or CIB-H ..... K.N.C.
Type SN ..... V.E.
Series MPF or WPF ..... V.M.&C.

D. Type RC-1 (Roof Curb, Type 1)

Type RC-1 isolation bases shall be a prefabricated assembly consisting of an extruded aluminum frame and steel spring isolation system that fits over the roof curb and under the isolated equipment. The aluminum frame shall be sufficiently rigid to support the equipment load without detrimental twist or deflection. Spring isolators shall be selected and positioned along the curb to achieve the minimum static deflection called for in the schedule. The static deflection shall be constant around the entire periphery of the base. Springs shall be free standing, laterally stable with a diameter of not less than 0.8 times the compressed height, and have additional travel-to-solid that is at least 50% of the rated deflection. Resilient neoprene snubbers shall be provided at the corners of the base to limit equipment movement to ¼” under wind load.

The isolation curb base shall be made weather tight by sealing all around the periphery with closed cell neoprene or flexible membrane that shall in no way inhibit the vibration isolation of the spring elements. Closed cell sponge gasketing or field caulking shall be used between the equipment unit and the isolation curb base and between the isolation curb and roof curb to form a weather-tight seal. Each spring isolator used in the curbs shall be weather-protected as described in the PRODUCTS section under General.

Type RC-1 vibration isolation curb bases shall be supplied by the isolator manufacturer and shall be one of the following products or approved equal:

Type CMAB ..... M.I.
Type ASR ..... K.N.C.
Type AR ..... V.E.
Series AXR.....V.M.&C.

E. Type RC-2 (Roof Curb, Type 2)

Type RC-2 isolation bases shall be a prefabricated assembly consisting of a structural steel frame and steel spring isolation system that also forms the roof curb under the isolated equipment. The steel frame shall be sufficiently rigid to support the equipment load without detrimental twist or deflection. Spring isolators shall be selected and positioned along the curb to achieve the minimum static deflection called for in the schedule. The static deflection shall be constant around the entire periphery of the base. Springs shall be free standing, laterally stable with a diameter of not less than 0.8 times the compressed height, and have additional travel-to-solid that is at least 50% of the rated deflection. Spring isolators shall include travel limit stops that are capable of serving as blocking during erection of the equipment. A minimum clearance of 1/4" shall be maintained around restraining bolts as they pass through the limit stop brackets. Springs and limits stops shall be provided at the corners of the base to limit equipment movement to ¼” under wind load.

The isolation curb base shall be made weather tight by sealing all around the periphery with closed cell neoprene, flexible membrane or light gauge spring metal loop, which shall in no way inhibit the vibration isolation of the spring elements. A closed cell sponge gasket or field caulking shall be used between the equipment unit and the isolation curb base and between the isolation curb and roof curb to form a weather-tight seal. Each spring isolator used in the curbs shall be weather-protected as described in the PRODUCTS section under General.

Type RC-2 vibration isolation curb bases shall be supplied by the isolator manufacturer and shall be one of the following products or approved equal:

Type VibCurb ..... N.A.I.
Type RSC..... M.I.
Type SSR ..... K.N.C.
Vibrocurb..... ThyCurb

2.5 RESILIENT PENETRATION SLEEVE/SEAL

Resilient penetration sleeve/seals shall be field-fabricated from a pipe or sheet metal section that is l/2" to 3/4" larger than the penetrating element in all directions around the element, and shall be used to provide a sleeve through the construction penetrated. The sleeve shall extend 1" beyond the penetrated construction on each side. The space between the sleeve and the penetrating element shall be packed with glass fiber or mineral wool to within 1/4" of the ends of the sleeve. The remaining 1/4" space on each end shall be filled with acoustical sealant to form an airtight seal. The penetrating element shall be able to pass through the sleeve without contacting the sleeve. Alternatively, prefabricated sleeves accomplishing the same result are acceptable.

Resilient penetration sleeves/seals shall be one of the following products or approved equal:

Type SWS……M.I.

2.6 RESILIENT LATERAL SUPPORTS

These units shall either be a standard product of the vibration isolator manufacturer, or be custom fabricated from standard components. These units shall incorporate neoprene isolation elements similar to Type FN that are specifically designed to provide resilient lateral bracing of ducts or pipes.

Resilient lateral supports shall be one of the following products or approved equal:

Type ADA ..... N.A.I.
Type ADA ..... M.I.
Type RGN ..... K.N.C.
Type VERG or VPL ..... V.E.
Type MDPA ..... V.M.&C.

2.7 FLEXIBLE DUCT CONNECTIONS

Flexible duct connections shall be made from coated fabric. The clear space between connected parts shall be a minimum of 3" and the connection shall have a minimum of 1.5" of slack material.

2.8 FLEXIBLE PIPE CONNECTIONS

Flexible pipe connections shall be fabricated of multiple plys of nylon cord, fabric, and neoprene; and shall be vulcanized so as to become inseparable and homogeneous. Flexible connections shall be formed in a double sphere shape, and shall be able to accept compressive, elongating, transverse, and angular movements.

The flexible connections shall be selected and specially fitted, if necessary, to suit the system temperature, pressure, and fluid type. In addition, suitable flexible connections should be selected, if possible, which do not require rods or cables to control extension of the connector.

Connectors for pipe sizes 2" or smaller shall have threaded female union couplings on each end. Larger sizes shall be fitted with metallic flange couplings.

Flexible pipe connections shall be one of the following or an approved equal:

Type U302 ..... N.A.I.
Type Twin Sphere ..... Metraflex
Type MFTNC or MFTFU ..... M.I.
Double Sphere Flexible Connectors ..... V.E.
Series VMT or VMU ..... V.M.&C.

2.9 THRUST RESTRAINTS

Thrust restraints shall consist of a spring element in series with a neoprene pad. The unit shall be designed to have the same deflection due to thrust-generated loads as specified for the isolators supporting the equipment. The spring element shall be contained within a steel frame and be designed so it can be precompressed at the factory to allow for a maximum of 1/4" movement during starting or stopping of the equipment. Allowable movement shall be field-adjustable. The assembly shall be furnished complete with rods and angle brackets for attachment to both the equipment and the adjacent fixed structural anchor. The thrust restraints shall be installed on the discharge of the fan so that the restraint rods are in tension. Assemblies that place the rods in compression are not acceptable. The holes in the spring restraint brackets through which the restraint rods pass must be oversized to prevent contact between the brackets and rods.

Thrust restraints shall be one of the following products or an approved equal:

Type TR ..... N.A.I.
Type HSR ..... K.N.C.
Type WB ..... M.I.
Thrust Restraint ..... V.E.

2.10 GROMMETS

Grommets shall be made of neoprene or neoprene impregnated duck that is specially formed to prevent bolts from directly contacting the isolator base plate, and shall be sized so that they will be loaded within the manufacturer's recommended load range.

Grommets shall either be custom made by combining a neoprene washer and sleeve, or be one of the following products or an approved equal:

Type Grommet ..... N.A.I.
Type HG ..... M.I.
Type Isogrommets .....MBIS, Inc. (Bedford Heights, OH)
Type WB .....Barry Controls (Brighton, MA)

2.11 ACOUSTICAL SEALANT

Sealants for acoustical purposes as described in this specification shall be silicone or one of the resilient, nonhardening sealants indicated below:

Premium Polyurethane Construction Adhesive Sealant.....D.A.P.
AIS-919, BA-98 or AC-20 FTR (Fire Rated) .....Pecora
Acoustical Sealant .....Tremco
Acoustical Sealant ..... U.S.G.

3. EXECUTION

3.1 APPLICATION

A. General

1. Refer to the PRODUCTS section of this specification for vibration isolation devices identified on the drawings or specified herein.
2. The static deflection of all isolators specified herein are the minimum acceptable deflections for the mounts under actual load. Isolators selected solely on the basis of rated deflection are not acceptable and will be disapproved.

B. Major Equipment Isolation

1. Unless otherwise shown or specified, all floor-mounted major equipment shall be set on housekeeping pads. See architectural or structural drawings for details.
2. Types and minimum static deflections of vibration isolation devices for major equipment items shall be as scheduled on the drawings or specified hereunder.
3. Flexible duct connections shall be installed at all fan unit intakes, fan unit discharges, and wherever else shown on the drawings.
4. Flexible pipe connections shall be installed at all pipe connections to vibration-isolated equipment in the positions shown on the drawings.
5. Electrical connections to vibration-isolated equipment shall be flexible, as called for in the electrical portion of the specification.
6. Thrust restraints shall be installed on all suspended fans and on all floor-mounted fans developing 4" or more of static pressure, unless the horizontal component of the thrust force can be demonstrated to be less than 10% of the equipment weight.

C. Miscellaneous Mechanical Equipment Isolation

1. Miscellaneous pieces of mechanical equipment, such as converters, pressure reducing stations, dryers, strainers, storage tanks, condensate receiver tanks, and expansion tanks, which are connected to isolated piping systems, shall be vibration-isolated from the building structure by Type NP or Type HN isolators (selected for 0.1" static deflection), unless their position in the piping system requires a higher degree of isolation as called for under Pipe Isolation.

D. Pipe Isolation

1. All chilled water, condenser water, hot water, steam, refrigerant, drain and engine exhaust piping that is connected to vibration-isolated equipment shall be isolated from the building structure within the following limits:

   Within mechanical rooms;

   Within 50' total pipe length of connected vibration-isolated equipment (chillers, pumps, air handling units, pressure reducing stations, etc.);

   At every support point for piping that is greater than 4 inches in diameter.

2. Piping shall be isolated from the building structure by means of vibration isolators, resilient lateral supports, and resilient penetration sleeve/seals.
3. Isolators for the first three support points adjacent to connected equipment shall achieve one half the specified static deflection of the isolators supporting the connected equipment. When the required static deflection of these isolators is greater than ½", Type FSN or HSN isolators shall be used. When the required static deflection is less than or equal to ½", Type FN or HN isolators shall be used. All other pipe support isolators within the specified limits shall be either Type FN or HN achieving at least ¼" static deflection.
4. Where lateral support of pipes is required within the specified limits, this shall be accomplished by use of resilient lateral supports.
5. Pipes within the specified limits that penetrate the building construction shall be isolated from the building structure by use of resilient penetration sleeve/seals.
6. Provide flexible pipe connections as called for under Major Equipment above and wherever shown on the drawings.

E. Duct Isolation

1. All sheet metal ducts and air plenums that are within mechanical rooms or within a distance of 50' total duct length of connected vibration-isolated equipment (whichever is longer) shall be isolated from the building structure by Type FN, PCF or HN isolators. All isolators shall achieve 0.1" minimum static deflection.
2. Ducts within the specified limits that penetrate the building construction shall be isolated from the building structure by use of resilient penetration sleeve/seals.
3. Flexible duct connections shall be provided as called for above under Major Equipment and wherever shown on the drawings.

3.2 INSTALLATION OF VIBRATION ISOLATION EQUIPMENT

A. General

1. Locations of all vibration isolation devices shall be selected for ease of inspection and adjustment as well as for proper operation.
2. Installation of vibration isolation equipment shall be in accordance with the manufacturer's instructions.

B. Isolators

1. All vibration isolators shall be aligned squarely above or below mounting points of the supported equipment.
2. Isolators for equipment with bases shall be located on the sides of the bases which are parallel to the equipment shaft unless this is not possible because of physical constraints.
3. Locate isolators to provide stable support for equipment, without excess rocking. Consideration shall be given to the location of the center of gravity of the system and the location and spacing of the isolators. If necessary, a base with suitable footprint shall be provided to maintain stability of supported equipment, whether or not such a base is specifically called for herein.
4. If a housekeeping pad is provided, the isolators shall bear on the housekeeping pad and the isolator base plates shall rest entirely on the pad.

5. Hanger rods for vibration-isolated support shall be connected to major structural members, not the floor slab between major structural members. Provide suitable intermediate support members as necessary.
6. Vibration isolation hanger elements shall be positioned as high as possible in the hanger rod assembly, but not in contact with the building structure, and so that the hanger housing may rotate a full 360° about the rod axis without contacting any object.
7. Parallel running pipes may be hung together on a trapeze that is isolated from the building. Isolator deflections must be the greatest required by the provisions for pipe isolation for any single pipe on the trapeze. Do not mix isolated and unisolated pipes on the same trapeze.
8. Pipes, ducts and equipment shall not be supported from other pipes, ducts and equipment.
9. Resiliently isolated pipes, ducts and equipment shall not come in rigid contact with the building construction or rigidly supported equipment.
10. The installed and operating heights of equipment supported by Type FSNTL isolators or with Type RC-2 isolation bases shall be identical. Limit stops shall be out of contact during normal operation. Adjust isolators to provide 1/4" clearance between the limit stop brackets and the isolator top plate, and between the travel limit nuts and travel limit brackets.
11. Adjust all leveling bolts and hanger rod bolts so that the isolated equipment is level and in proper alignment with connecting ducts or pipes.

C. Bases

1. No equipment unit shall bear directly on vibration isolators unless its own frame is suitably rigid to span between isolators and such direct support is approved by the equipment manufacturer. This provision shall apply whether or not a base frame is called for on the schedule. In the case that a base frame is required for the unit because of the equipment manufacturer's requirements and is not specifically called for on the equipment schedule, a base frame recommended by the equipment manufacturer shall be provided at no additional expense.
2. Unless otherwise indicated, there is to be a minimum operating clearance of 1" between steel rails, steel frame bases or inertia bases and the floor beneath the equipment. The isolator mounting brackets shall be positioned and the isolators adjusted so that the required clearance is maintained. The clearance space shall be checked by the Contractor to ensure that no construction debris has been left to short circuit or restrict the proper operation of the vibration isolation system.
3. Isolation bases shall be installed in strict accordance with the manufacturer’s instructions.

D. Resilient Penetration Sleeve/Seals

1. Maintain an airtight seal around the penetrating element and prevent rigid contact between the penetrating element and the building structure. Fit the sleeve tightly to the building construction and seal airtight on both sides of the construction penetrated with acoustical sealant.

E. Flexible Duct Connections

1. Prior to installation of the flexible connection, sheet metal ducts and plenum openings shall be squarely aligned with the fan discharge, fan intake, or adjacent duct section, and the gap between connected parts shall be uniform. Flexible duct connections shall not be installed until this provision is met. There shall be no metal-to-metal contact between connected sections, and the fabric shall not be stretched taut.

F. Flexible Pipe Connections

1. Install flexible pipe connections in strict accordance with the manufacturer's instructions.

G. Thrust Restraints

1. Thrust restraints shall be attached on each side of the fan parallel to the thrust force. This may require custom brackets or standoffs. The body of the thrust restraint shall not come in contact with the connected elements. Thrust restraints shall be adjusted to constrain equipment movement to the specified limit.

H. Grommets

1. Where grommets are required at hold down bolts of isolators, bolt holes shall be properly sized to allow for grommets. The hold down bolt assembly shall include washers to distribute load evenly over the grommets. Bolts and washers shall be galvanized.

APPENDIX IV

FOOD SERVICE EQUIPMENT
LIST AND BUDGET

Crabtree McGrath Associates, Inc.

FOOD FACILITIES PLANNERS

161 West Main Street, Georgetown, Massachusetts 01833
phone: 978.352.8500
mail@crabtree-mcgrath.com

BUDGET ESTIMATE — Foodservice Equipment

project: **Leicester Middle School**
Leicester, MA

date: **November 12, 2019**

QTY	DESCRIPTION	COST
1	Mop rack/shelf	$275
1	Stacked clothes washer/dryer	$1,350
1	Detergent storage cabinet	$4,200
2	Utility cart	$850
1	Walk-in cooler & freezer	$65,800
13	Mobile shelving	$7,500
2	Mobile dunnage platforms	$400
4	Hand sinks	$3,800
1	Food processor	$1,350
3	Prep counter with sinks	$24,600
1	Exhaust ventilator w/ fire system	$56,500
1	Thirty-gallon braising pan & kettle	$31,300
1	Floor pan & grate	$1,350
1	Grate top range with oven	$4,800
1	Ten-pan steamer with water filter	$24,500
3	Convection ovens (one double stacked)	$50,400
1	Hose reel	$1,300
1	Three-compartment sink	$6,200
1	Wall shelf	$550
2	Mobile pot & pan storage racks	$850
9	Storage shelving	$2,700
3	Dunnage platform	$330
5	Mobile work table	$6,500
1	Automatic food slicer	$8,900
1	Mobile slicer stand	$985
1	Mobile work table	$1,200
1	Reach-in refrigerator	$7,200
2	Mobile hot food cabinets	$8,800
1	Mobile work table	$1,200
2	Mobile pan rack	$850
1	Cook's table with	$3,200
1	Twenty-quart mixer	$6,800
1	Mobile mixer stand	$985
3	Cold pan	$10,600
1	Serving counters with hot food wells	$33,600
3	Serving counters	$48,750
3	Mobile cashier stands	$20,400
2	Mobile condiment counters	$8,800
1	Ventless ware wahser	$38,900
1	Dirty & clean ware table	$14,600
	Total	**$513,175**

The budget estimate includes the delivery and installation of specified foodservice equipment complete with its accessories, left ready for final connections to building services by Related Trades then cleaned and demonstrated. Equipment shall include one year warranty or a manufacturer's warranty if the standard warranty exceeds one year. Not included are taxes, permits, fees, or related construction and utilities work.

APPENDIX V

HVAC SMOKE EVACUATION
NARRATIVE

SMOKE CONTROL NARRATIVE

Leicester Middle School
LEICESTER, MASSACHUSETTS

DATE: NOVEMBER 26, 2019

TO: Christopher Lane, AIA
Finegold Alexander Architects, Inc.

FROM: Ken Beck, PE
BLW Engineers, Inc.

SUBJECT: PROPOSED SMOKE CONTROL NARRATIVE

COPIES TO: File

The following is a schematic design narrative of the smoke control system for the Leicester Middle School atrium.

SECTION 1 – BUILDING DESCRIPTION

1. Building atrium consists of three floors with 14' from floor to floor.
2. Balconies are open to the atrium at each floor with a central staircase connecting the balconies.
3. Each balcony opens to a 12'wide by 13' tall hallway extending away from the atrium.

SECTION 2 – SMOKE CONTROL SYSTEM TO BE INSTALLED

1. The building will require 12 smoke exhaust fans typical of Greenheck model USF-36 (sized for 15,700 CFM at 1"ESP; 7.5HP; 460V/3P/60Hz) located on the roof of the atrium located centrally away from any walls. Each fan shall be ducted down through the roof with a 46" round duct and terminate at the ceiling with 16 SF of exhaust registers.
2. The total free area required for make-up air is 250 square feet which is to be provided by any operable doors, windows, and louvers.
3. Each corridor (total of 6) is to be provided with 62.4 SF of free area open to the outdoors to provide make-up air. Louvers are estimated to be 125 SF and provide 31,200 CFM (sized for airflow at 200 fpm within the corridors with 50% free area at the louver). Louvers shall be provided with motorized dampers and ducted (approximate duct cross section size of 15 SF) to 156 SF of transfer registers.
4. Firefighter Smoke Control Panel is to be provided and connected to Fire Alarm Panel.
5. All equipment and controls shall be connected to Firefighter Smoke Control Panel and emergency backup power.

SECTION 3 – FIRE ALARM SYSTEM SEQUENCE OF OPERATION

1. Activation of smoke detectors shall:
   a. Send alarm to Firefighter Smoke Control Panel and Fire Alarm Panel
   b. Open all make-up air louvers within the corridors
   c. Energize the smoke exhaust fans

APPENDIX VI

FF&E BUDGET

Room Type	# of Rms	Qty	Description	Unit Price	Extended	Type Total
CORE ACADEMIC SPACES						
Pre-K	2	1	Teacher Desk With Podium	$ 1,500.00	$ 1,500.00	
18 students		1	Task Chair with arms, Teacher	$ 470.00	$ 470.00	
		18	Student Chair, 12" seat height	$ 75.00	$ 1,350.00	
		2	Student Table, Trapazoid, adj. height, 3-person	$ 500.00	$ 1,000.00	
		1	Half Moon Table	$ 350.00	$ 350.00	
		3	Student Table, 60" x 36", 4-person	$ 400.00	$ 1,200.00	
		1	Area Rug (9x12), Colored Squares	$ 550.00	$ 550.00	
		1	Reading chair	$ 450.00	$ 450.00	
		1	Easel/Mobile Chart Stand	$ 200.00	$ 200.00	
		1	Mobile Large Book Bin	$ 275.00	$ 275.00	
		6	Student Alternative Stool	$ 150.00	$ 900.00	
		2	Bean Bag Chair	$ 150.00	$ 300.00	
		4	Resting Mat, set-of-4	$ 150.00	$ 600.00	
		1	*Art Easel (Double Sided), carried in equipment allowance*	*$ -*	*$ -*	
		1	*Sand/Water Table, carried in equipment allowance*	*$ -*	*$ -*	
		1	*Play Kitchen Set (With Tables, Chairs), carried in equipment allowance*	*$ -*	*$ -*	
		1	*Puppet Theater Dramatic Play Station, carried in equipment allowance*	*$ -*	*$ -*	
					$ 9,145.00	$18,290.00
Kindergarten	4	1	Teacher Desk With Podium	$ 1,500.00	$ 1,500.00	
18 students		1	Task Chair with arms, Teacher	$ 470.00	$ 470.00	
		18	Student Chair, 12" seat height	$ 75.00	$ 1,350.00	
		4	Student Table, Trapazoid, adj. height, 3-person	$ 500.00	$ 2,000.00	
		1	Half Moon Table	$ 350.00	$ 350.00	
		2	Student Table, 60" x 36", 4-person	$ 400.00	$ 800.00	
		1	Area Rug (9x12), Colored Squares	$ 550.00	$ 550.00	
		1	Reading chair	$ 450.00	$ 450.00	
		1	Easel/Mobile Chart Stand	$ 200.00	$ 200.00	
		1	Mobile Large Book Bin	$ 275.00	$ 275.00	
		6	Student Alternative Stool	$ 150.00	$ 900.00	
		2	Bean Bag Chair	$ 150.00	$ 300.00	
		4	Resting Mat, set-of-4	$ 150.00	$ 600.00	
		1	*Art Easel (Double Sided), carried in equipment allowance*	$ -	$ -	
		1	*Sand/Water Table, carried in equipment allowance*	$ -	$ -	
		1	*Play Kitchen Set (With Tables, Chairs), carried in equipment allowance*	$ -	$ -	
		1	*Puppet Theater Dramatic Play Station, carried in equipment allowance*	$ -	$ -	
					$ 9,745.00	$38,980.00
1st Grade	4	1	Teacher Desk With Podium	$ 1,500.00	$ 1,500.00	
25 students		1	Task Chair with arms, Teacher	$ 470.00	$ 470.00	
		25	Student Chair, 14" seat height	$ 85.00	$ 2,125.00	
		3	Student Table, 60" x 36", 4-person	$ 400.00	$ 1,200.00	
		4	Student Table, Trapazoid, adj. height, 3-person	$ 500.00	$ 2,000.00	
		1	Half Moon Table	$ 350.00	$ 350.00	
		1	Area Rug (9x12), Colored Squares	$ 550.00	$ 550.00	
		1	Reading chair	$ 450.00	$ 450.00	
		1	Easel/Mobile Chart Stand	$ 200.00	$ 200.00	
		1	Mobile Large Book Bin	$ 275.00	$ 275.00	
		6	Student Alternative Stool	$ 150.00	$ 900.00	
		2	Bean Bag Chair	$ 150.00	$ 300.00	
					$ 10,320.00	$41,280.00
2nd Grade	4	1	Teacher Desk With Podium	$ 1,500.00	$ 1,500.00	
25 students		1	Task Chair with arms, Teacher	$ 470.00	$ 470.00	
		25	Student Chair, 14" seat height	$ 85.00	$ 2,125.00	
		3	Student Table, 60" x 36", 4-person	$ 400.00	$ 1,200.00	
		4	Student Table, Trapazoid, adj. height, 3-person	$ 500.00	$ 2,000.00	
		1	Half Moon Table	$ 350.00	$ 350.00	
		1	Area Rug (9x12), Colored Squares	$ 550.00	$ 550.00	
		1	Reading chair	$ 450.00	$ 450.00	
		1	Easel/Mobile Chart Stand	$ 200.00	$ 200.00	
		1	Mobile Large Book Bin	$ 275.00	$ 275.00	
		6	Student Alternative Stool	$ 150.00	$ 900.00	
		2	Bean Bag Chair	$ 150.00	$ 300.00	
					$ 10,320.00	$41,280.00

Room Type	# of Rms	Qty	Description	Unit Price	Extended	Type Total
3rd Grade	4	1	Teacher Desk With Podium	$ 1,500.00	$ 1,500.00	
25 students		1	Task Chair with arms, Teacher	$ 470.00	$ 470.00	
		25	Student Chair, 16" seat height	$ 85.00	$ 2,125.00	
		3	Student Table, 60" x 36", 4-person	$ 400.00	$ 1,200.00	
		4	Student Table, Trapazoid, adj. height, 3-person	$ 500.00	$ 2,000.00	
		1	Half Moon Table	$ 350.00	$ 350.00	
		2	Student Desk, Standing	$ 775.00	$ 1,550.00	
		1	Area Rug (9x12), Solid Color	$ 500.00	$ 500.00	
		1	Reading chair	$ 450.00	$ 450.00	
		1	Easel/Mobile Chart Stand	$ 200.00	$ 200.00	
		6	Student Alternative Stool	$ 150.00	$ 900.00	
		2	Bean Bag Chair	$ 150.00	$ 300.00	
					$ 11,545.00	$46,180.00
4th Grade	4	1	Teacher Desk With Podium	$ 1,500.00	$ 1,500.00	
25 students		1	Task Chair with arms, Teacher	$ 470.00	$ 470.00	
		25	Student Chair, 16" seat height	$ 85.00	$ 2,125.00	
		4	Student Table, 60" x 36", 4-person	$ 400.00	$ 1,600.00	
		2	Student Table, Trapazoid, adj. height, 3-person	$ 500.00	$ 1,000.00	
		1	Half Moon Table	$ 350.00	$ 350.00	
		2	Student Desk, Standing	$ 775.00	$ 1,550.00	
		1	Area Rug (9x12), Solid Color	$ 500.00	$ 500.00	
		1	Reading chair	$ 450.00	$ 450.00	
		1	Easel/Mobile Chart Stand	$ 200.00	$ 200.00	
		6	Student Alternative Stool	$ 150.00	$ 900.00	
		2	Bean Bag Chair	$ 150.00	$ 300.00	
					$ 10,945.00	$43,780.00
5th Grade	4	1	Teacher Desk With Podium	$ 1,500.00	$ 1,500.00	
25 students		1	Task Chair with arms, Teacher	$ 470.00	$ 470.00	
		25	Student Chair, 18" seat height	$ 85.00	$ 2,125.00	
		2	Student desk, trapezoid	$ 170.00	$ 340.00	
		1	Student Table, 60" x 36", 4-person	$ 400.00	$ 400.00	
		8	Student Table, Trapazoid, adj. height, 3-person	$ 500.00	$ 4,000.00	
		2	Student Desk, Standing	$ 775.00	$ 1,550.00	
		2	Laptop charging cabinet	$ 1,200.00	$ 2,400.00	
					$ 12,785.00	$51,140.00
6th Grade	4	1	Teacher Desk With Podium	$ 1,500.00	$ 1,500.00	
25 students		1	Task Chair with arms, Teacher	$ 470.00	$ 470.00	
		25	Student Chair, 18" seat height	$ 85.00	$ 2,125.00	
		2	Student desk, trapezoid	$ 170.00	$ 340.00	
		1	Student Table, 60" x 36", 4-person	$ 400.00	$ 400.00	
		8	Student Table, Trapazoid, adj. height, 3-person	$ 500.00	$ 4,000.00	
		2	Student Desk, Standing	$ 775.00	$ 1,550.00	
		2	Laptop charging cabinet	$ 1,200.00	$ 2,400.00	
					$ 12,785.00	$51,140.00
7th Grade	4	1	Teacher Desk With Podium	$ 1,500.00	$ 1,500.00	
25 students		1	Task Chair with arms, Teacher	$ 470.00	$ 470.00	
		25	Student Chair, 18" seat height	$ 85.00	$ 2,125.00	
		2	Student desk, trapezoid	$ 170.00	$ 340.00	
		1	Student Table, 60" x 36", 4-person	$ 400.00	$ 400.00	
		8	Student Table, Trapazoid, adj. height, 3-person	$ 500.00	$ 4,000.00	
		2	Student Desk, Standing	$ 775.00	$ 1,550.00	
		2	Laptop charging cabinet	$ 1,200.00	$ 2,400.00	
					$ 12,785.00	$51,140.00

Room Type	# of Rms	Qty	Description	Unit Price	Extended	Type Total
8th Grade	4	1	Teacher Desk With Podium	$ 1,500.00	$ 1,500.00	
25 students		1	Task Chair with arms, Teacher	$ 470.00	$ 470.00	
		25	Student Chair, 18" seat height	$ 85.00	$ 2,125.00	
		2	Student desk, trapezoid	$ 170.00	$ 340.00	
		1	Student Table, 60" x 36", 4-person	$ 400.00	$ 400.00	
		8	Student Table, Trapazoid, adj. height, 3-person	$ 500.00	$ 4,000.00	
		2	Student Desk, Standing	$ 775.00	$ 1,550.00	
		2	Laptop charging cabinet	$ 1,200.00	$ 2,400.00	
					$ 12,785.00	$51,140.00
Science, 6-8 Grades	3	1	Teacher Desk With Podium	$ 1,500.00	$ 1,500.00	
25 students		1	Task Chair with arms, Teacher	$ 470.00	$ 470.00	
		1	Science table, Teacher Demo	$ 1,800.00	$ 1,800.00	
		25	Student Stool, with back, glides	$ 168.00	$ 4,200.00	
		6	Science tables,epoxy top, 4-person	$ 1,800.00	$ 10,800.00	
					$ 18,770.00	$56,310.00
Science Prep	3	3	Industrial shelving, 5 high	$ 450.00	$ 1,350.00	
					$ 1,350.00	$4,050.00
Science Storage	1	3	Industrial shelving, 5 high	$ 450.00	$ 1,350.00	
		1	Chemical/Flammable liquids storage cabinet	$ 1,000.00	$ 1,000.00	
					$ 1,350.00	$1,350.00
STEM, 3rd-4th Grades	1	1	Teacher Desk With Podium	$ 1,500.00	$ 1,500.00	
25 students		1	Task Chair with arms, Teacher	$ 470.00	$ 470.00	
		25	Student Stool, Perch	$ 85.00	$ 2,125.00	
		8	Student Table, Trapazoid, adj. height set at 34", 3-person	$ 500.00	$ 4,000.00	
		1	Student Table, 60" x 36", 4-person	$ 400.00	$ 400.00	
		1	Mobile Whiteboard	$ 600.00	$ 600.00	
		1	Half Moon Table	$ 350.00	$ 350.00	
					$ 9,445.00	$9,445.00
STEM, 5th-6th Grades	1	1	Teacher Desk With Podium	$ 1,500.00	$ 1,500.00	
25 students		1	Task Chair with arms, Teacher	$ 470.00	$ 470.00	
		25	Student Stool, Perch	$ 85.00	$ 2,125.00	
		1	Mobile Whiteboard	$ 600.00	$ 600.00	
		2	Industrial Shelving, 5-high	$ 450.00	$ 900.00	
		5	Work Bench, wood top, locking casters, 34" high, 4-person	$ 1,800.00	$ 9,000.00	
					$ 14,595.00	$14,595.00
STEM, 7th-8th Grades	1	1	Teacher Desk With Podium	$ 1,500.00	$ 1,500.00	
25 students		1	Task Chair with arms, Teacher	$ 470.00	$ 470.00	
		25	Student Stool, Perch	$ 85.00	$ 2,125.00	
		1	Mobile Whiteboard	$ 600.00	$ 600.00	
		2	Industrial Shelving, 5-high	$ 450.00	$ 900.00	
		5	Work Bench, wood top, locking casters, 34" high, 4-person	$ 1,800.00	$ 9,000.00	
					$ 14,595.00	$14,595.00
STEM Storage	1	3	Industrial Shelving, 5-high	$ 450.00	$ 1,350.00	
					$ 1,350.00	$1,350.00
Flex Learning	8	1	Mobile Flip-Top Table	$ 650.00	$ 3,900.00	
		6	Student Stool, Upholstered	$ 500.00	$ 3,000.00	
					$ 6,900.00	$55,200.00

Room Type	# of Rms	Qty	Description	Unit Price	Extended	Type Total
SPECIAL EDUCATION/RESOURCES						
Lower School SPED Classroom	3	1	Teacher Desk With Podium	$ 1,500.00	$ 1,500.00	
12 Students		1	Task Chair with arms, Teacher	$ 470.00	$ 470.00	
		12	Student Chair, 16" seat height	$ 85.00	$ 1,020.00	
		1	2-dwr Lateral File	$ 500.00	$ 500.00	
		4	Student Table, Trapazoid, adj. height, 3-person	$ 500.00	$ 2,000.00	
		1	Half Moon Table	$ 350.00	$ 350.00	
		2	Mobile Storage	$ 815.00	$ 1,630.00	
		2	Carrel, 36" x 24"	$ 620.00	$ 1,240.00	
		1	Area Rug (9x12)	$ 550.00	$ 550.00	
		6	Student Alternative Stool	$ 150.00	$ 900.00	
		1	Easel/Mobile Chart Stand	$ 200.00	$ 200.00	
		2	Bean Bag Chair	$ 150.00	$ 300.00	
					$ 10,660.00	$31,980.00
Upper School SPED Classroom	3	1	Teacher Desk With Podium	$ 1,500.00	$ 1,500.00	
12 Students		1	Task Chair with arms, Teacher	$ 470.00	$ 470.00	
		12	Student Chair, 18" seat height	$ 85.00	$ 1,020.00	
		1	2-dwr Lateral File	$ 500.00	$ 500.00	
		2	Student Table, 60" x 36", 4-person	$ 400.00	$ 800.00	
		2	Student desk, trapezoid	$ 170.00	$ 340.00	
		2	Student Desk, Standing	$ 775.00	$ 1,550.00	
		1	Half Moon Table	$ 350.00	$ 350.00	
		2	Mobile Storage	$ 815.00	$ 1,630.00	
		2	Carrel, 36" x 24"	$ 620.00	$ 1,240.00	
		1	Area Rug (9x12)	$ 550.00	$ 550.00	
		6	Student Alternative Stool	$ 150.00	$ 900.00	
		2	Bean Bag Chair	$ 150.00	$ 300.00	
		1	Easel/Mobile Chart Stand	$ 200.00	$ 200.00	
					$ 11,350.00	$34,050.00
Substantially Separate Classroom	3	1	Teacher Desk With Podium	$ 1,500.00	$ 1,500.00	
20 Students		1	Task Chair with arms, Teacher	$ 470.00	$ 470.00	
		1	Lateral File, 36/2-hi	$ 600.00	$ 600.00	
		20	Student Chair, 16" seat height	$ 85.00	$ 1,700.00	
		5	Student Table, Trapazoid, adj. height, 3-person	$ 500.00	$ 2,500.00	
		1	Half Moon Table	$ 350.00	$ 350.00	
		4	Carrel, 36" x 24"	$ 620.00	$ 2,480.00	
		1	Area Rug (9x12)	$ 550.00	$ 550.00	
		6	Student Alternative Stool	$ 150.00	$ 900.00	
		2	Bean Bag Chair	$ 150.00	$ 300.00	
					$ 11,350.00	$34,050.00
Lower School Intervention	1	4	Student Table, 60" x 30"	$ 475.00	$ 1,900.00	
2-4 Students		8	Student Chair, 16" seat height	$ 85.00	$ 680.00	
					$ 2,580.00	$2,580.00
Upper School Intervention	1	6	Student Table, 60" x 30"	$ 475.00	$ 2,850.00	
8-10 Students		12	Student Chair, 18" seat height	$ 85.00	$ 1,020.00	
					$ 3,870.00	$3,870.00
OT/PT	2	1	Teacher Desk With Podium	$ 1,500.00	$ 1,500.00	
		1	Task Chair, Office	$ 470.00	$ 470.00	
		6	Student Chair, 18" seat height	$ 85.00	$ 510.00	
		2	Student Table, 60" x 30"	$ 475.00	$ 950.00	
		1	2-dwr Lateral File	$ 500.00	$ 500.00	
		1	Bean Bag Chair	$ 150.00	$ 150.00	
			Smallwares Equipment, Carried in Equipment Allowance	*$ -*	*$ -*	
					$ 4,080.00	$8,160.00

Room Type	# of Rms	Qty	Description	Unit Price	Extended	Type Total
Sensory	2	2	Bean Bag Chair	$ 150.00	$ 300.00	
					$ 300.00	$600.00
De-escalation	4	1	Bean Bag Chair	$ 150.00	$ 150.00	
					$ 150.00	$600.00
ESL/Speech	1	2	Teacher Desk With Podium	$ 1,500.00	$ 3,000.00	
16 Students		2	Task Chair with arms, Teacher	$ 470.00	$ 940.00	
		16	Student Chair, 18" seat height	$ 85.00	$ 1,360.00	
		1	Student Table, 60" x 36", 4-person	$ 400.00	$ 400.00	
		4	Student Table, Trapazoid, adj. height, 3-person	$ 500.00	$ 2,000.00	
		1	Half Moon Table	$ 350.00	$ 350.00	
		2	Carrel, 36" x 24"	$ 620.00	$ 1,240.00	
		2	Mobile Storage	$ 815.00	$ 1,630.00	
		6	Student Alternative Stool	$ 150.00	$ 900.00	
					$ 11,820.00	$11,820.00
Living and Learning Classroom	1	1	Teacher Desk With Podium	$ 1,500.00	$ 1,500.00	
20 Students		1	Task Chair with arms, Teacher	$ 470.00	$ 470.00	
		20	Student Chair, 18" seat height	$ 85.00	$ 1,700.00	
		1	Student Table, 60" x 36", 4-person	$ 400.00	$ 400.00	
		4	Student Table, Trapazoid, adj. height, 3-person	$ 500.00	$ 2,000.00	
		1	Student Table, Round	$ 400.00	$ 400.00	
		1	Bed with Mattress	$ 1,700.00	$ 1,700.00	
		1	2-Seater Sofa	$ 3,200.00	$ 3,200.00	
		1	Coffee Table	$ 800.00	$ 800.00	
					$ 12,170.00	$12,170.00
ART & MUSIC						
Lower School Art Classroom	1	1	Teacher Desk With Podium	$ 1,500.00	$ 1,500.00	
25 Students		1	Task Chair with arms, Teacher	$ 470.00	$ 470.00	
		25	Student Stool, perch, small	$ 85.00	$ 2,125.00	
		1	Area Rug (9x12), Art Themed	$ 550.00	$ 550.00	
		1	Easel/Mobile Chart Stand	$ 200.00	$ 200.00	
		7	Art Workbench, Epoxy Top, 29" high	$ 1,800.00	$ 12,600.00	
		2	Flat File, 24 x 36	$ 1,500.00	$ 3,000.00	
		1	*Art Easel, Carried in Equipment Allowance*	*$ -*	*$ -*	
		2	*Drying Rack, Carried in Equipment Allowance*	*$ -*	*$ -*	
			Equipment Smallwares, Carried in Equipment Allowance	*$ -*	*$ -*	
					$ 20,445.00	$20,445.00
Upper School Art Classroom	1	1	Teacher Desk With Podium	$ 1,500.00	$ 1,500.00	
25 Students		1	Task Chair with arms, Teacher	$ 470.00	$ 470.00	
		25	Student Stool, perch	$ 90.00	$ 2,250.00	
		1	Easel/Mobile Chart Stand	$ 200.00	$ 200.00	
		7	Art Workbench, Cubby Storage Below, Epoxy Top; 34" high	$ 2,500.00	$ 17,500.00	
		2	Flat File, 24 x 36	$ 1,500.00	$ 3,000.00	
		1	*Art Easel, Carried in Equipment Allowance*	*$ -*	*$ -*	
		2	*Drying Rack, Carried in Equipment Allowance*	*$ -*	*$ -*	
			Equipment Smallwares, Carried in Equipment Allowance	*$ -*	*$ -*	
					$ 24,920.00	$24,920.00
Workroom	1	2	Industrial Shelving Unit, 5-high	$ 450.00	$ 900.00	
					$ 900.00	$900.00
Workroom - Kiln Room	1		*Kiln w/vent & furniture kit, carried in equipment allowance*	*$ -*	*$ -*	
			Ceramics ware rack, carried in equipment allowance	*$ -*	*$ -*	
Lower School Music Classroom	1	1	Teacher Desk With Podium	$ 1,500.00	$ 1,500.00	
25 Students		1	Task Chair with arms, Teacher	$ 470.00	$ 470.00	
		25	Student Music Chair	$ 65.00	$ 1,625.00	
		25	Music Stand	$ 75.00	$ 1,875.00	
		2	Music Chair Dolly	$ 400.00	$ 800.00	
		2	Music Stand Dolly	$ 475.00	$ 950.00	
		2	Mobile Flip-Top Table	$ 650.00	$ 1,300.00	
		1	Area Rug (9x12), Music Themed	$ 1,200.00	$ 1,200.00	
		1	Mobile Whiteboard, Scale	$ 400.00	$ 400.00	
		2	Vertical File, 4 Drawer (for sheet music storage)	$ 650.00	$ 1,300.00	
		1	Easel/Mobile Chart Stand	$ 200.00	$ 200.00	
		1	*Instrument Storage, By GC*	*$ -*	*$ -*	
					$ 11,620.00	$11,620.00

Room Type	# of Rms	Qty	Description	Unit Price	Extended	Type Total
Upper School Band	1	1	Teacher Desk With Podium	$ 1,500.00	$ 1,500.00	
25 Students		1	Task Chair with arms, Teacher	$ 470.00	$ 470.00	
		2	Mobile Flip-Top Table	$ 650.00	$ 1,300.00	
		25	Music Chair	$ 65.00	$ 1,625.00	
		25	Music Stand	$ 75.00	$ 1,875.00	
		2	Music Chair Dolly	$ 400.00	$ 800.00	
		2	Music Stand Dolly	$ 475.00	$ 950.00	
		1	Mobile Whiteboard, Staves	$ 400.00	$ 400.00	
		1	Conductor's Stand, Podium and Stool	$ 3,000.00	$ 3,000.00	
		1	Percussion Workstation Cabinet	$ 2,000.00	$ 2,000.00	
		4	Folding Choral Risers, 4-Step, (50 students)	$ 2,000.00	$ 8,000.00	
		2	Vertical File, 4 Drawer (for sheet music storage)	$ 650.00	$ 1,300.00	
			Instrument Storage, By GC	*$ -*	$ -	
			Piano, by LPS	*$ -*	$ -	
					$ 23,220.00	$23,220.00
Upper School Chorus	1	1	Teacher Desk With Podium	$ 1,500.00	$ 1,500.00	
25 Students		1	Task Chair with arms, Teacher	$ 470.00	$ 470.00	
		2	Mobile Flip-Top Table	$ 650.00	$ 1,300.00	
		25	Music Chair	$ 65.00	$ 1,625.00	
		25	Music Stand	$ 75.00	$ 1,875.00	
		1	Mobile Whiteboard, Staves	$ 400.00	$ 400.00	
			Instrument Storage, By GC	*$ -*	$ -	
					$ 7,170.00	$7,170.00
Music Ensemble, Small	2	2	Music Chair	$ 65.00	$ 130.00	
		2	Music Stand	$ 75.00	$ 150.00	
					$ 280.00	$560.00
Music Ensemble, Large	1	4	Music Chair	$ 65.00	$ 260.00	
		4	Music Stand	$ 75.00	$ 300.00	
					$ 560.00	$560.00
HEALTH & PHYSICAL EDUCATION						
Gym	1	1	Mobile Podium	$ 3,000.00	$ 3,000.00	
		1	Flag, wall mount	$ 120.00	$ 120.00	
		1	Scorers Table	$ 3,200.00	$ 3,200.00	
		30	Folding Team Chair	$ 145.00	$ 4,350.00	
		30	Chair caddie	$ 750.00	$ 22,500.00	
		1	*PE smallwares, carried in equipment allowance*	*$ -*	*$ -*	
					$ 33,170.00	$ 33,170.00
Gym Storage	1	4	Industrial Shelving Unit, 5- high	$ 425.00	$ 1,700.00	
					$ 1,700.00	$1,700.00
PE Office	2	1	Desk, With Return	$ 1,500.00	$ 1,500.00	
		1	Task Chair with arms Office	$ 470.00	$ 470.00	
		1	Guest Chair, upholstered	$ 450.00	$ 450.00	
					$ 2,420.00	$ 4,840.00
Boys Locker Room	1		*No FF+E*			
Girls Locker Room	1		*No FF+E*			
Health Classroom	1	1	Teacher Desk With Podium	$ 1,500.00	$ 1,500.00	
25 Students		1	Task Chair with arms, Teacher	$ 470.00	$ 470.00	
		25	Student Chair, 18" seat height	$ 85.00	$ 2,125.00	
		2	Student desk, trapezoid	$ 170.00	$ 340.00	
		1	Student Table, 60" x 36", 4-person	$ 400.00	$ 400.00	
		8	Student Table, Trapazoid, adj. height, 3-person	$ 500.00	$ 4,000.00	
		2	Student Desk, Standing	$ 775.00	$ 1,550.00	
		1	Bean Bag Chair	$ 150.00	$ 150.00	
					$ 9,035.00	$ 9,035.00

Room Type	# of Rms	Qty	Description	Unit Price	Extended	Type Total
Health & Wellness Studio	1	1	Teacher Desk With Podium	$ 1,500.00	$ 1,500.00	
		1	Task Chair with arms, Teacher	$ 470.00	$ 470.00	
		6	Stack Chair	$ 115.00	$ 690.00	
		2	Mobile Flip-Top Table	$ 650.00	$ 1,300.00	
			Studio Equipment, Carried in Equipment Allowance			
					$ 3,960.00	$3,960.00
Health & Wellness Storage	1	2	Industrial Shelving Unit, 5- high	$ 425.00	$ 850.00	
					$ 850.00	$850.00
MEDIA CENTER						
Media Center	1	2	Task Chair with arms Office	$ 470.00	$ 940.00	
5000 volumes		2	Desk, With Return	$ 1,500.00	$ 3,000.00	
		20	Study Table	$ 1,000.00	$ 20,000.00	
		40	Study Chair	$ 400.00	$ 16,000.00	
		1	Ancillary Furniture Allowance	$ 75,000.00	$ 75,000.00	
		1	Library Shelving Allowance	$ 35,000.00	$ 35,000.00	
		1	*Circulation Desk, By GC*	*$ -*	$ -	
					$ 149,940.00	$149,940.00
Lower School Maker Space	1	1	Teacher Desk With Podium	$ 1,500.00	$ 1,500.00	
25 Students		1	Task Chair with arms, Teacher	$ 470.00	$ 470.00	
		25	Student Stool, perch, small	$ 85.00	$ 2,125.00	
		6	Student Table, 60" x 36", 4-person	$ 400.00	$ 2,400.00	
		1	Mobile Whiteboard	$ 400.00	$ 400.00	
		1	Half Moon Table	$ 350.00	$ 350.00	
					$ 7,245.00	$7,245.00
Upper School Maker Space	1	1	Teacher Desk With Podium	$ 1,500.00	$ 1,500.00	
25 Students		1	Task Chair with arms, Teacher	$ 470.00	$ 470.00	
		25	Student Stool, Perch	$ 90.00	$ 2,250.00	
		6	Work Bench, wood top, 34" height	$ 2,000.00	$ 12,000.00	
		1	Mobile Whiteboard	$ 400.00	$ 400.00	
					$ 16,620.00	$16,620.00
DINING & FOOD SERVICE						
Cafeteria	1	350	Stacking Chair	$ 115.00	$ 40,250.00	
350-375 seats		6	Circular Café Table, ADA, 5' (seats 8)	$ 1,500.00	$ 9,000.00	
		40	Rectangular Café Table, convert to bench seats, 8' (seats 10 children/8 adults)	$ 1,700.00	$ 68,000.00	
					$ 117,250.00	$117,250.00
Cafeteria Storage	1	12	Chair Dolly (stores approx. 30 plastic stack chairs)	$ 500.00	$ 6,000.00	
					$ 6,000.00	$6,000.00
Platform	1	1	Presentation Podium, Wood, Mic, And Light	$ 4,000.00	$ 4,000.00	
			US Flag with gilded stand, carried in equipment allowance	*$ -*	*$ -*	
					$ 4,000.00	$4,000.00
Kitchen	1		*Food service equipment by others*	$ -	$ -	
			Smallwares in equipment allowance	$ -	$ -	
					$ -	$0.00
Kitchen Office	1	1	Desk, With Return	$ 1,500.00	$ 1,500.00	
		1	Task Chair with arms Office	$ 470.00	$ 470.00	
					$ 1,970.00	$ 1,970.00
Staff Dining	1	3	Dining Table, Square	$ 400.00	$ 1,200.00	
		12	Stacking Chair	$ 115.00	$ 1,380.00	
					$ 2,580.00	$2,580.00

Room Type	# of Rms	Qty	Description	Unit Price	Extended	Type Total
MEDICAL SUITE						
Lower School Nurse	1	2	Task Chair with arms Office	$ 470.00	$ 940.00	
with Treatment Room		2	Desk, double pedestal	$ 1,000.00	$ 2,000.00	
		1	Lateral file, 36/3-hi	$ 700.00	$ 700.00	
		5	Stack Chair	$ 115.00	$ 575.00	
		2	Rest Cots, low	$ 540.00	$ 1,080.00	
		1	Resting Cot, high	$ 800.00	$ 800.00	
		3	Side Table With Storage	$ 450.00	$ 1,350.00	
		2	Exam stool	$ 165.00	$ 330.00	
					$ 7,775.00	$7,775.00
Upper School Nurse	1	1	Task Chair with arms Office	$ 470.00	$ 470.00	
with Treatment Room		1	Desk, double pedestal	$ 1,000.00	$ 1,000.00	
		1	Lateral file, 36/3-high	$ 700.00	$ 700.00	
		5	Stack Chair	$ 115.00	$ 575.00	
		2	Rest Cots, low	$ 540.00	$ 1,080.00	
		1	Resting Cot, high	$ 800.00	$ 800.00	
		3	Side Table With Storage	$ 450.00	$ 1,350.00	
		2	Exam stool	$ 165.00	$ 330.00	
					$ 6,305.00	$6,305.00
Nurse Storage	1	2	Industrial Shelving Unit, 5- high	$ 425.00	$ 850.00	
					$ 850.00	$850.00
Medical Toilet	2	1	3-Shelf Storage Cabinet	$ 550.00	$ 550.00	
					$ 550.00	$1,100.00
ADMINISTRATION						
General Office	1	4	Task Chair with arms Office	$ 470.00	$ 1,880.00	
		4	Workstations; L shape with panels	$ 3,000.00	$ 12,000.00	
		4	Lateral file, 36/2 hi	$ 600.00	$ 2,400.00	
		2	Side Table	$ 600.00	$ 1,200.00	
		8	Guest Chair, upholstered	$ 450.00	$ 3,600.00	
					$ 21,080.00	$21,080.00
Records Room	1	12	Vertical File (4-drawer)	$ 650.00	$ 7,800.00	
					$ 7,800.00	$7,800.00
Copy	1	1	Lateral file, 36/4-hi	$ 900.00	$ 900.00	
					$ 900.00	$900.00
Principal's Office	2	1	Desk, U shape	$ 2,500.00	$ 2,500.00	
		1	Task Chair with arms Office	$ 470.00	$ 470.00	
		1	Lateral file, 36/2-hi	$ 600.00	$ 600.00	
		1	Meeting Table, 84 x 42	$ 450.00	$ 450.00	
		8	Guest Chair, upholstered	$ 450.00	$ 3,600.00	
		2	Bookcase, 4-hi	$ 800.00	$ 1,600.00	
					$ 9,220.00	$18,440.00
Admin Conference Room	1	1	Conference table, 120 x 48	$ 1,500.00	$ 1,500.00	
		12	Guest Chair, upholstered	$ 450.00	$ 5,400.00	
		1	Credenza	$ 2,500.00	$ 2,500.00	
					$ 9,400.00	$9,400.00
Assistant Principal Office	2	1	Desk, With Return	$ 1,500.00	$ 1,500.00	
		1	Task Chair with arms Office	$ 470.00	$ 470.00	
		1	Guest Chair, upholstered	$ 450.00	$ 450.00	
		1	Bookcase, 3-hi	$ 600.00	$ 600.00	
					$ 3,020.00	$ 6,040.00
Supervisory Office	2	4	Student Chair, 18" seat height	$ 85.00	$ 340.00	
		4	Student desk, trapezoid	$ 170.00	$ 680.00	
					$ 1,020.00	$ 2,040.00
Team	2	1	Meeting table, 72 x 36	$ 1,350.00	$ 1,350.00	
		4	Guest Chair, upholstered	$ 450.00	$ 1,800.00	
					$ 3,150.00	$ 6,300.00
Assistant Principal Conference Room	1	1	Conference table, 96 x 48	$ 1,500.00	$ 1,500.00	
		10	Guest Chair, upholstered	$ 450.00	$ 4,500.00	
		1	Credenza	$ 2,500.00	$ 2,500.00	
					$ 8,500.00	$8,500.00

Room Type	# of Rms	Qty	Description	Unit Price	Extended	Type Total
Guidance Office	1	1	Desk, double pedestal	$ 1,000.00	$ 1,000.00	
		1	Task Chair with arms Office	$ 470.00	$ 470.00	
		3	Guest Chair, upholstered	$ 450.00	$ 1,350.00	
		1	Meeting table round, 36 dia	$ 800.00	$ 800.00	
		1	Lateral file, 36/2-hi	$ 600.00	$ 600.00	
					$ 4,220.00	$4,220.00
Psychologist Office	2	1	Desk, double pedestal	$ 1,000.00	$ 1,000.00	
		1	Task Chair with arms Office	$ 470.00	$ 470.00	
		3	Guest Chair, upholstered	$ 450.00	$ 1,350.00	
		1	Meeting table round, 36 dia	$ 800.00	$ 800.00	
		1	Lateral file, 36/2-hi	$ 600.00	$ 600.00	
					$ 4,220.00	$8,440.00
Guidance Storeroom	1	1	Industrial Shelving Unit, 5- high	$ 425.00	$ 425.00	
					$ 425.00	$425.00
Teacher's Planning Room	4	2	Meeting Table, 72 x 30	$ 700.00	$ 1,400.00	
		10	Side Chair	$ 350.00	$ 3,500.00	
					$ 4,900.00	$19,600.00
CUSTODIAL & MAINTENANCE						
Custodial Office	1	1	Desk, double pedestal	$ 1,000.00	$ 1,000.00	
		1	Task Chair with arms Office	$ 470.00	$ 470.00	
		1	Work table	$ 800.00	$ 800.00	
		1	Stool	$ 150.00	$ 150.00	
					$ 2,420.00	$ 2,420.00
Custodial Storage	3	3	Industrial Shelving Unit, 5- high	$ 425.00	$ 1,275.00	
					$ 1,275.00	$3,825.00
IT	1	2	Task Chair with arms Office	$ 470.00	$ 940.00	
					$ 940.00	$940.00
			Subtotal Furniture			$1,316,080.00
EQUIPMENT						

NOTE: Equipment allowance is an estimate based on projects of similar scope. Exact equipment requirements are not yet finalized.

Subtotal Equipment Allowance	$400,000.00
Subtotal, Furniture & Equipment	$1,716,080.00
Contingency - (10%)	$171,608.00
Grand Total	$1,887,688.00
Cost Per Student (980 Students)	*$1,926.21*
FFE Budget ($1,200/student)	*$1,176,000.00*
Difference	*-$711,688.00*

NOTES

1. Copy, plotter, printer and fax equipment are not included in this budget.
2. Computers and AV equipment are not included in this budget.
3. Library book security system not included in this budget.
4. Residential appliances are not included in this budget.
5. Pricing assumes CAL-117 compliance.